Service Instruction

SI: 16-800-318
Date: 05/18/2006

Revision: 0

Written by:	Greg Burt	Revised by:	
Approved by:	B. L. Thomas	Date of Revision:	05/19/06

SmartMonitor 2 and 2 PS Metal Patient Connector Upgrade

PRODUCT(S) AFFECTED

- SmartMonitor 2 (All Model Numbers)
- SmartMonitor 2PS (All Model Numbers)

PURPOSE/DESCRIPTION

The purpose of this document is to provide instructions for replacing previously installed damaged plastic Patient Connectors with newly designed metal Patient Connectors on all SmartMonitor 2 (SM2) and SmartMonitor 2 PS (SM2PS) models.

NOTE
Damaged Plastic Patient Connectors will be replaced at no charge to the customer. If there is no damage to the Patient Connector, the connector shall be replaced only at the customers request and at the normal replacement fee.

AFFECTED LOCATION

- SCYW

RELATED ENGINEERING CHANGE ORDER

500000002708

ACTIONS REQUIRED

- Devices received with damaged plastic patient connectors will be repaired using the new metal patient connector at no charge.
- Upgraded devices must be returned to the customer with the newly designed metal connector Patient ECG Cables.
- Devices without damaged plastic connectors may be upgraded to the metal connector at the request of the customer and at the customer's expense unless otherwise noted.
- Devices with broken plastic patient connectors may be repaired with the old plastic style patient connector only at the request of the customer while supplies last.
- If an entire bottom enclosure that has a plastic Patient Connector installed must be replaced, a new bottom enclosure with a new metal Patient Connector must be used and a new metal connector Patient Cable must accompany the device – The Patient Cable will be supplied at no charge.

IMPLEMENTATION DATE

- As of 05/08/2006 all new SmartMonitor 2 and SmartMonitor 2 PS units will be built with the metal connector.
- Service will start repairing units with the metal patient connector as of 06/01/2006.

EQUIPMENT REQUIRED

- Screwdriver – Phillips
- Pliers – Needle Nose

PARTS REQUIRED

- RI p/n 1030192 – SM2/SM2PS Homecare Patient Cable (Only)
- RI p/n 1030193 – SM2/SM2PS Hospital Patient Cable (Only)
- RI p/n 1031429 – SM2/2PS Metal Connector with Homecare Patient Cable
- RI p/n 1031430 – SM2/2PS Metal Connector with Hospital Patient Cable

1031428 – Metal Patient Connector Kit #1031[19]

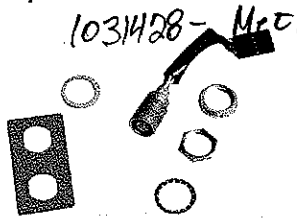

Metal Patient Connector

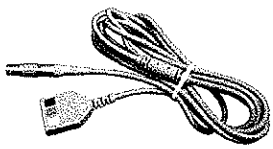

Patient Cable with Metal Connector

REFERENCE DOCUMENTS

- SmartMonitor 2 Service Manual – Reorder # 1007898
- SmartMonitor 2PS Service Manual – Reorder #102027

PROCEDURE

CAUTION
Follow appropriate Electrostatic Discharge (ESD) procedures.

1. Remove the top enclosure of the SmartMonitor 2 or SmartMonitor 2 PS device in accordance with the appropriate service manual.
2. Remove the plastic patient connector in accordance with the appropriate service manual.

NOTE
If this repair is being performed on a Smart Monitor 2PS unit, the oximeter connector will need to be removed from the front panel and re-installed as the metal support bracket covers both openings.

3. Install the new metal patient connector and support bracket.
   a. Insert the metal support bracket aligning the holes with the front panel holes.
   b. Screw the hex nut onto the metal patient connector, leaving two full threads open next to the connector cable.
   c. Place the lock washer in front of the hex nut.
   d. Insert the metal patient connector through the opening of the front panel. Align the guide edge with the plastic washer opening in the front panel.
   e. Install the plastic washer to the metal patient connector end protruding through the front panel.
   f. Screw the dress nut onto the metal patient connector. Hand-tighten the nut until it is snug with the plastic front panel.
   g. Using pliers, turn the dress nut ¼ of a turn. Be careful not to over-tighten the nut.
   h. Connect the patient connector cable to the Main PCA.
4. Re-assemble the SmartMonitor 2 or SmartMonitor 2 PS device in accordance with the appropriate service manual.
5. Test the device in accordance with the appropriate service manual.

REVISION HISTORY PAGE

Document Revision	Author of Revision	Description of Changes
0	Greg Burt	Initial Revision.

Children's Medical Ventures

RESPIRONICS®

www.respironics.com

the heart of developmental care℠

May 15, 2006

Dear valued SmartMonitor® 2 customer:

As part of our ongoing effort to continuously improve our products, Respironics is pleased to announce that we will begin manufacturing SmartMonitor 2 and SmartMonitor 2PS units with a metal receptacle for the Patient ECG Cable in place of the current plastic receptacle. As part of the implementation of this new receptacle, there will also be a metal connector on a new, compatible Patient ECG Cable. This new metal connector/receptacle combination will provide you with a more durable and impact-resistant cable connection on the front of the monitor. Furthermore, the new metal connectors meet all essential safety guidelines.

Please be aware that a Patient ECG Cable with a plastic connector may <u>not</u> be used with a metal receptacle. Likewise, a Patient ECG Cable with a metal connector may <u>not</u> be used with a plastic receptacle.

How does this change affect your SmartMonitor 2 and SmartMonitor 2PS units?

- Children's Medical Ventures will begin shipping new monitors in the SmartMonitor 2 family starting in May. The conversion for the complete family of products will be phased in over the next two months with completion expected by July 1. Monitors that ship with the metal patient cable receptacle will be shipped with a new Patient ECG cable that has a metal connector. We anticipate that monitors with the metal connectors will begin shipping in late May.

- Monitors sent to Respironics Service for repair due to damaged patient cable receptacles after **June 1, 2006** will be repaired using the metal receptacle at the current replacement cost. This repair will include a new Patient ECG Cable with a metal connector **at no charge**. If you specify that you would like the connector replaced with a plastic connector, we will be able to accommodate your request for a limited time while supplies last.

- Monitors sent to Respironics for all other types of service may be upgraded with the metal receptacle – at the customer's request – and at the current replacement cost. This will include a new Patient ECG Cable with a metal connector **at no charge**.

- A SmartMonitor 2 or SmartMonitor 2PS may be sent to Respironics Service at any time for an upgrade to the metal receptacle at the current replacement cost. You will receive a new Patient ECG Cable with a metal connector **at no charge**.

- Customers certified to perform repairs may purchase a repair kit that includes the metal receptacle and a new Patient ECG Cable with a metal connector.

We will continue to carry both types of cables, and there is no immediate need to update your older SmartMonitor 2 and SmartMonitor 2PS units. A reference chart and pictorial instruction have been provided to assist you with the ordering of replacement cables.

If you have any questions, please contact your sales representative or Customer Service at (800) 345-6443.

Sincerely,

Amy J. Phillips

Amy J. Phillips
Director of Marketing, Children's Medical Ventures

ORDERING INFORMATION

Part Number	Description	Specifications
Metal		
1030192	SmartMonitor 2 Series Homecare ECG Cable with **METAL** Connector	0.080 in/2.00 mm pin size
1030193	SmartMonitor 2 Series Hospital ECG Cable with **METAL** Connector	0.060 in/1.5 mm pin size
1030194	European SmartMonitor 2 Series ECG Cable with **METAL** Connector	0.060 in/1.5 mm pin size
Plastic		
H4005	SmartMonitor 2 Series Homecare ECG Cable with **PLASTIC** Connector	0.080 in/2.00 mm pin size
1014558	SmartMonitor 2 Series Hospital ECG Cable with **PLASTIC** Connector 4500	0.060 in/1.5 mm pin size
4005-04	European SmartMonitor 2 Series ECG Cable with **PLASTIC** Connector	0.060 in/1.5 mm pin size
Repair Kits		
1031429	RP – SM2/SM2PS **METAL** Connector with Homecare ECG Cable Kit	0.080 in/2.00 mm pin size
1031430	RP – SM2/SM2PS **METAL** Connector with Hospital ECG Cable Kit 10319	0.060 in/1.5 mm pin size

~~103~~

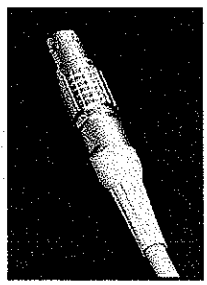

New ECG cable with **METAL** connector

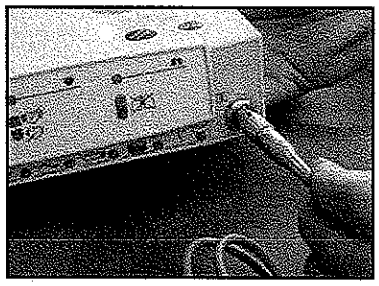

Metal cable connection to **Metal** monitor connector **only** with red dot facing up

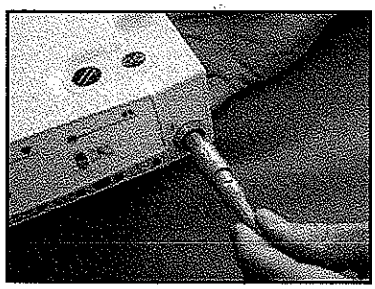

Current ECG cable with **Plastic** connector to **Plastic** connector **only**

RESPIRONICS
www.respironics.com

SmartMonitor® 2

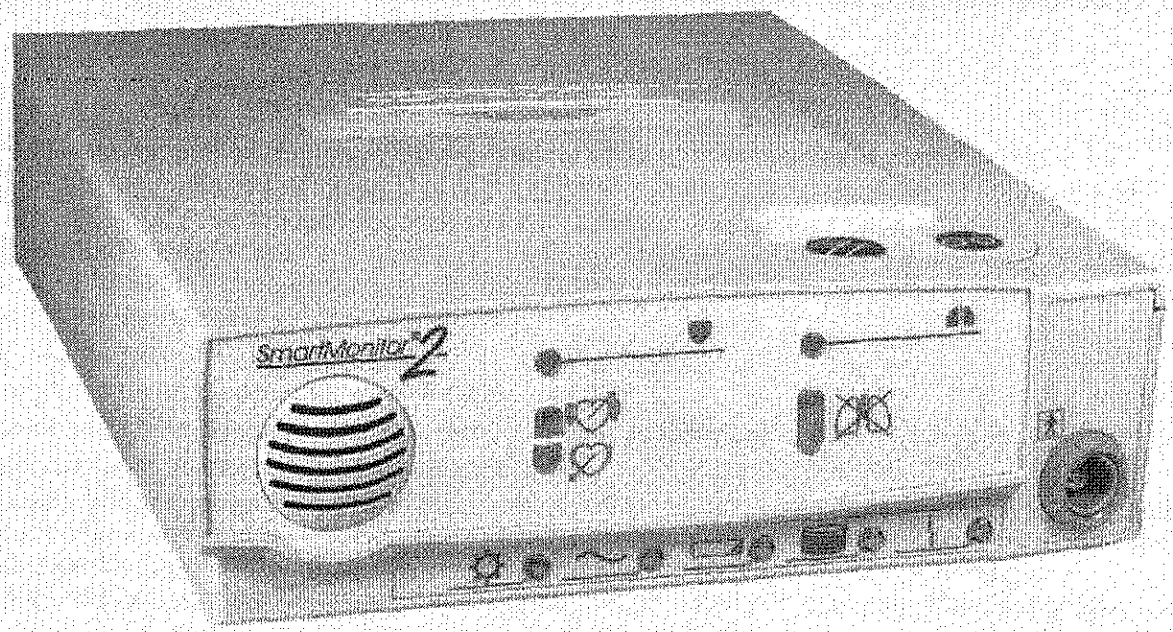

Service Manual

RESPIRONICS®

Limited Warranty

Respironics warrants that the monitor will be free from defects in materials and workmanship for a period of one year from the time of purchase. Respironics accessories are warranted to be free of defects in materials and workmanship for a period of 90 days from the time of purchase.
The Respironics equipment and authorized accessories are designed to function as described in the operator's manual. The user/owner of this equipment shall have sole responsibility and liability for any injury to persons or damage to property (including this equipment) resulting from:

- Operation not in accordance with supplied operating instructions;
- Maintenance not in accordance with authorized maintenance/operational instructions;
- Service by anyone other than a factory authorized service representative;
- Modification of the equipment or accessories; or
- Use of damaged or unauthorized components and accessories.

THIS LIMITED WARRANTY IS IN LIEU OF ANY AND ALL OTHER WARRANTIES, EXPRESSED OR IMPLIED, INCLUDING WITHOUT LIMITATION IMPLIED WARRANTIES OF MERCHANTABILITY AND FITNESS FOR A PARTICULAR PURPOSE; TO THE EXTENT THAT STATE OR FEDERAL LAW PROHIBITS EXCLUSIONS OF IMPLIED WARRANTIES, ANY SUCH IMPLIED WARRANTY IMPOSED BY LAW SHALL BE LIMITED TO A PERIOD OF NINETY (90) DAYS FROM THE DATE OF THE INITIAL PURCHASE FROM RESPIRONICS.
To exercise your rights under this warranty, contact your local authorized Respironics dealer, or contact Respironics at:

RESPIRONICS INC.®
1501 Ardmore Boulevard
Pittsburgh, Pennsylvania
15221-4401 USA

RESPIRONICS®
175 Chastain Meadows Ct.
Kennesaw, Georgia
30144 USA

RESPIRONICS®
Deutschland
Gewerbestrasse 17
82211 Herrsching Germany

Visit Respironics Home Page on the World Wide Web at:

www.respironics.com

Table of Content

Overview: SmartMonitor 2 Service Manual O-1

Chapter 1 Introduction
1.1 SmartMonitor 2 Overview 1-1

Chapter 2 Warnings, Cautions 2-1
2.1 Warnings 2-2
2.2 Cautions 2-3
2.3 Classifications 2-4

Chapter 3 System Requirements, ... Features and Specifications
3.1 System Requirements 3-2
3.2 System Features 3-3
3.3 System Specifications 3-3

Chapter 4 Installation and Setup
4.1 Setting Alarm & Recording Limits 4-2
4.2 Transfering Information 4-5

Chapter 5 Routine Maintenance 5-1
5.1 Overview 5-2
5.2 Cleaning Instructions 5-2

Chapter 6 Troubleshooting ..... and Diagnostics 6-1
6.1 Overview 6-2
6.2 Troubleshooting Table 6-3

Chapter 7 Repair & Replacement 7-1
7.1 Overview 7-2
7.1.1 Component Identification 7-3
7.2 SmartMonitor 2 Repair Kits 7-4
7.3 Accessories 7-7
7.4 Replacement Instructions 7-9

Chapter 8 Verification 8-1
Checkout Procedures 8-2
8.1 Test Data Sheet 8-8

Appendix A A-1

Chapter 1: Introduction

1.1 SmartMonitor 2 Overview

1. General System Description

The SmartMonitor 2 is intended for use in continuous monitoring of heart rate and respiration of infant and adult *patients in a home, hospital or portable environment. It's* secondary function is measurement of heart rate. SmartMonitor 2 receives physiological signals via transducers attached to the patient and directly connected to the monitor, or from devices connected to the auxiliary inputs of the monitor. Physiological signals (patient events) and equipment events are recorded in nonvolatile memory for subsequent review and analysis by a Health Care Professional.

Patient alarm limits are set by the health care professional before you receive the SmartMonitor 2 unit. During monitoring, when the baby's breathing effort and heart activity are not within these set boundaries, an indicator light comes on and an alarm sounds.

Other devices may be used with the SmartMonitor 2:

- Nellcor 200
- Nova Cosmo Oximeter
- Ohmeda OXI
- 930 Oximeter
- Synectics pH
- Sandhill pH
- NPB-295
- Nova Cosmo ETC02

RESPIRONICS INC.®
1501 Ardmore Boulevard
Pittsburgh, Pennsylvania
15221-4401 USA

RESPIRONICS®
175 Chastain Meadows Ct.
Kennesaw, Georgia
30144 USA

RESPIRONICS®
Deutschland
Gewerbestrasse 17
82211 Herrsching Germany

Visit Respironics Home Page on the World Wide Web at:
www.respironics.com

E-Mail:
service@respironics.com

Chapter 2: Warnings, Cautions, Classifications

2.1 Warnings 2-2
2.2 Cautions 2-3
2.3 Classifications.....2-4

Chapter 2: Warnings, Cautions, Classifications

2.1 Warnings

Please read this section carefully before using the SmartMonitor 2 to monitor a baby's breathing and heart activity.

A *warning* indicates a potentially harmful situation.

- SmartMonitor 2 may not be able to detect all episodes of inadequate breathing. If a baby has *apnea* due to choking (*obstructive apnea*), the monitor could mistake movement caused by choking for breathing.
- SmartMonitor 2 is a monitoring device only. It does not prevent the loss of breathing or heart activity, nor will it restore breathing or heart activity. It will not prevent death.
- Anyone using the SmartMonitor 2 to monitor an infant should be trained in current infant ***Cardiopulmonary Resuscitation*** (*CPR*), which is a proper way to restore breathing and heart activity.
- The SmartMonitor 2 is not intended for use with cardiac or diaphragmatic pacemaker patients.
- When using the monitor near patients on oxygen, the monitor must be kept at least three (3) feet away from the oxygen tank (source) or other flammable gases to prevent a fire hazard.
- Place the monitor on a sturdy and level surface to prevent the monitor from falling.
- Do not place the monitor on the floor. It may become a tripping hazard.
- Do not place the monitor in the crib. The baby may roll on the hard surface and be injured.
- Use only those accessories provided by Respironics with this monitor.
- Do not allow the patients cable, lead wires or power cord/battery charger cable to become tangled, coiled, crossed, or wrapped around the baby's neck, arms, or legs. This could result in strangulation.
- Do not connect to an electrical outlet controlled by a wall switch to prevent inadvertently turning the power off to the monitor.
- Do not block the speaker or place items in front of the speaker located on the front of the unit. This could prevent the monitor alarm from being heard.
- Never use the monitor on the baby while the baby is being bathed. This could result in electrical shock and/or damage to the equipment.
- Disconnect the power cord/battery charger and phone line during lightning storms to reduce risk of electrical shock to the baby.
- Remove the electrode belt and the lead wires when the baby is not being monitored. Long term wear may be uncomfortable.
- Never use an extension cord with the Power cord/battery charger as this may cause a fire and /or tripping hazard.
- Be aware of signal interference that can occur from external sources. Electronic signals are required for the SmartMonitor 2 to function. Sources of external interference could cause the monitor to miss apnea and heart rate alarms. Even though the monitor contains methods and techniques which can provide protection from external sources of interference, you should operate the monitor as follows:

- Keep monitoring equipment, patient and patient leads at least three (3) feet away from all electrical appliances. Some examples of this include TV sets, electric blankets, air conditioners, microwave ovens, cordless telephones, cellular phones, waterbeds, and home computers.
- Synthetic fabric from draperies or rugs can also cause interference due to static electricity. Touching a conductive material with a grounded path, such as a wall or crib, before handling the patient or the SmartMonitor 2 often prevents static buildup problems.
  •Strong transmitter signals from TV, radio, airport, police, fire, and ambulance stations could be picked up as heart and/or breath signals. If located less than one (1) mile from one or more of these sources, the monitor may be affected.
- In some locations, the monitor will not work properly. If the monitor is affected by external interference in the area, you may not be able to use the monitor. Contact Respironics for further assistance. Use of a ***third (RL) electrode*** may help reduce electrical interference.
- If monitoring two or more infants in the same area, keep the monitors, patient, patient cables and lead wires at lease three (3) feet apart. Having the patient cables and lead wires close together may cause missed apneas due to interference.
- Do not connect the infant to the SmartMonitor 2 if the monitor is placed in the *Communications Mode.* The apnea and heart alarms do not work when the SmartMonitor 2 is in this mode.
- Do not use the SmartMonitor 2 at the same time as other ***impedance*** monitors. This may cause missed apneas due to interference.
- Do not rock the baby or sleep in the same bed with the baby while monitoring. Touching or moving near the baby, monitor, or cables could cause the monitor to miss apneas.

2.2 Cautions

A ***caution*** indicates a condition that may lead to equipment damage, malfunction, or inaccurate operation.
Federal law (US) restricts this device to sale by, or on the order of a license physician. This instrument should be used only under the supervision of a physician.

- Perform the functional self test if the SmartMonitor 2 has been x-rayed by and airport security check.
- Do not place liquids on or near the SmartMonitor 2. Liquids may damage the electronic components inside the monitor. Should liquid spill onto monitor, shut monitor off and call Respironics to have it serviced.
- Do not send information via modem during electrical storms. Information could be lost or equipment could be damaged.
- Handle the lead wires carefully to prevent them from breaking inside the insulation. Always grasp the lead wire at the ***strain relief area*** to remove them from the ***electrodes*** or patient cable.
- Insure that the auxiliary devices used do not exceed SELV (Safety Extra Low Voltage) levels as described EN60601-1. It is the dealer's responsibility to ensure that auxiliary devices comply with either UL2601-1 or UL544.

2.3 Classification

The SmartMonitor 2 is classified as:

- Class II/Internally Powered equipment.
- Type BF Applied part.
- Ordinary protection against the ingress of liquids.
- Not suitable for use in the presence of a flammable anesthetic mixture with air or nitrous oxide.
- Continuous operation.

Chapter 3: System Requirements, Features, and Specifications

3.1 System Requirements 3-2
3.2 System Features 3-2
3.3 System Specifications 3-3

Chapter 3: System Requirements, Features, and Specifications

3.1 System Requirements

Operating System	Windows 95 (OSR2 or higher), Windows 98, Windows NT 4.0 (service pack 3 or higher), Windows Me or Windows 2000.

You must have administrative access to install under Windows 2000

Processor and RAM	Minimum depends on the operating system: • Windows 95, Windows 98 or Windows NT 4.0: Pentium 100 MHz and 16 Mb RAM • Windows 2000 or Windows Me: Pentium 266 MHz and 64 Mb RAM
Hard Drive Space	100 Mb free disk space (minimum)
3.5" Floppy Diskette Drive	Needed for license disk
CD-ROM Drive	Needed for installation
Monitor	VGA monitor (800x600) resolution minimum
Serial Port	An available COM port - for your modem if a direct link is required
Printer	Any Windows-compatible printer (local or networked) if reports are required
Mouse	Any Microsoft-compatible printer (local or networked) if reports are required
Serial Cable	SmartMonitor or SmartMonitor 2 direct connect cable, see Ordering Information
Modem	Any Windows-compatible modem if modem download is required
PCMCIA Reader	Needed if SmartMonitor 2 PCMCIA card download is required

3.1.2 Indications for Use / Patient and Environment

The SmartMonitor® 2 Infant Apnea Monitor is intended for use in the continuous monitoring of respiration and heart rate of infant patients in a home or hospital environment. The monitor detects and alarms for periods of central apnea and high or low heart rates.

3.2 System Features

The SmartMonitor 2 system incorporates the following features

- Respiration Detection Light
- Apnea Alarm Light
- Heart Rate Detection Light
- Memory Card (*Optional*)
- Modem (*Optional*)
- Bradycardia Alarm Light
- Tachycardia Alarm Light
- Loose Lead Light
- Charging Light
- Low Battery Light
- Full Memory Light

3.3 System Specifications

Classification: Class II, Type BF applied part.

ENVIRONMENTAL:

Temperature	Operating: 41°F to 113°F (5°C to 45°C) Storage: -4°F to 149°F (-20°C to 65°C)
Humidity	Operating: up to 95% (non-condensing. Storage: 10-95%)

PHYSICAL:

Dimensions	9"(L) × 9.25" (W) × 4" (H) (11.2 x 23/5 x 22.9 cm)
Weight	2.6 Pounds, 1.18 kg

System Specifications Cont.

ELECTRICAL

AC Input Voltage	120V, 60 Hz or 230V, 50Hz
AC Current Consumption	0.75A-0.35A

System Specifications (continued)

DC Input Voltage	10.5 VDC
DC Current Consumption	0.1-1A @10.5-11.5VDC
Communications	Serial output via computer
Battery	Type: 6vdc 1.85Ah Minimum Rechargeable Rechargeable NIMH, 15 hours continuous use. Recharge time 6 hours @ 77° F; shelf life, 30 days if fully charged.

Chapter 4: Installation and Setup

4.1 Setting Alarm and Recording Limits 4-2

4.2 Transferring SmartMonitor 2 Information 4-4

Chapter 4: Installation and Setup

4.1 Setting Alarm and Recording Limits

The SmartMonitor 2 has the ability to program alarm and recording limits as prescribed by the physician. The methods include by way of a computer or manually through the display on the bottom of the monitor.

4.1.1 Manual Set-Up

Remove the display door from the bottom of the monitor. Beneath the display door you will find the display or LCD and 3 buttons. These buttons are used to key in a "Password" into the monitor. The menu system has 3 passwords. Each accesses a different level of options. These 3 levels are Monitor Set-Up; System Set-Up; and view only. The following discusses these in detail.

The Parameter Display Menu is used to select all alarm and recording settings. You can adjust settings manually, by modem, or by direct communication. When you access the Parameter Display Menu, the SmartMonitor 2 is in Menu mode.
The SmartMonitor 2 will beep once every 10 seconds to signal that it is powered on and in Menu mode.

To Set or Modify Parameters Manually, Enter Menu Mode

- Press the **POWER** button to turn the monitor ON. After a short delay, the display will read:
  INITIALIZING PLEASE WAIT
  Then, MENU MODE? ENTER PROPER KEY SEQUENCE
- Press the keys in the following sequence within 10 seconds:
- **Down arrow, Up arrow, Up arrow, ENTER, ENTER, ENTER**
- The display will read SmartMonitor 2 MENU SELECTION.
- The SmartMonitor 2 menu has 4 entries that are presented in a continuous loop. Use the **up arrow key** to display the next menu entry.
- Use the down arrow key to display the preceding menu entry.
- When the parameter you want to change is displayed, press the **ENTER** button. The current value for the parameter displayed will flash.
- Use the ▲ or ▼ key to change the parameter to the desired value.
- When the desired value is displayed, press the **ENTER** button to accept the value.
- Press the up arrow to choose the menu path you want to review. There are 4 menu paths to choose from:
- All menus
- Alarm menus

- Recording menu
- System menu

  Once the changes are completed turn the SmartMonitor 2 off by pressing the following buttons:
- Press and hold the blue **RESET** button.
- Press and release the gray **POWER** button.
- Wait two seconds, then release the **RESET** button.

When you power the SmartMonitor 2 off and then back on, the new values will be implemented.

For step by step instructions, refer to the users manual.

4.2 Transferring SmartMonitor 2 Information

The SmartMonitor 2 contains a memory system that automatically records information about each monitoring session. This information can be transferred (or *downloaded*) to a computer to be reviewed by the physician. There are several different ways to transfer this information.

Whatever method you use, you *must* transfer data when you get a **memory 100% full** condition. You may *choose* to transfer data at any time or whenever it is considered necessary by the dealer or physician.

Memory Management in the SmartMonitor 2

When data is successfully transferred to a PCMCIA card or downloaded to Synergy-E, the data appears to be erased in the SmartMonitor 2. It no longer counts toward the reading of "Percent Memory Full" on the LCD or in Synergy-E. Because of this memory management system, it is not necessary to erase the memory after every download. It is recommended that you do erase the memory between each patient use, use the "clear memory" function in the System Parameters menu will erase all data regardless of whether or not it has been downloaded.

Should a data file become corrupted or lost on the PC running Synergy-E, the data may still be recovered from the monitor. The data can be recovered using Synergy-E until the SmartMonitor 2 has collected new data and needs the space occupied by the old data.

To recover the old data using a PCMCIA card
Transfer the data to the card using the SmartMonitor 2. Now import the card into Synergy-E. When prompted with "Only obtain data not previously retrieved?" Answer **NO** to obtain all data. Synergy-E will then display all the data that was in the SmartMonitor 2.

To recover the old data by downloading using Synergy-E
Clear the Check box in the monitor communications screen which reads "Only retrieve data not previously downloaded?". Synergy-E will then display all the data that was in the SmartMonitor 2.

Modem Download
There are 3 ways to download with a modem. The first choice involves the modem automatically call the home care dealer. This is called Modem Auto Dial. This doesn't involve any action on the caregivers' part. It is important to know that the modem inside the unit may use the phone line. If you are going to use this feature you *should give more specific instructions to the caregiver.*

The second choice is called Modem Auto Answer in Communications Mode.

This option is basically the same as Modem Auto Dial, the difference is the baby is not being monitored and the device is in Communications mode when the home care dealer calls.

The third option involved you the home care dealer calling to the Modem built inside the monitor while the baby is being monitored. This is called Modem Auto Answer in Monitor Mode (baby being monitored). You must contact the caregiver when it is time to transfer the data through the modem. We will discuss all three.

Modem Auto Dial

To have SmartMonitor 2 call the computer for a download it must be programmed with a Host Phone Number, which is the phone number to be called for a connection with the computer as well as the date and time to call. If the phone number field is blank, no attempt to call will be made. These must be set up in the SmartMonitor 2 before it is placed in the patient home. When the present time for download approaches or when the memory full light illuminates, follow these instructions:

If there is an emergency and access to the telephone is required while the modem is in use, remove phone cord from modem slot and use a working phone.

- Plug the telephone wire into the modem connector on the back of the SmartMonitor .
- Plug the other end of the phone wire into the wall phone jack.

Refer to the Synergy-E™ software for instruction on receiving a call from the SmartMonitor 2.

Modem will continue calling every 30 minutes, for 4 hours until it connects with the computer. If no connection is made, the modem will try again the next day at the pre-selected time. For example, if the modem is programmed to call at 7am but fails to make a connection after 8 attempts it will stop trying. The next day at 7am it will try again. This will continue until a connection is made.

Modem Auto Answer in communications Mode

- Connect a phone cord from the wall jack to the modem connector on the back of the SmartMonitor 2.
- To allow the SmartMonitor 2 to work with the modem, place the monitor in Communications Mode:
  - Press and hold the blue **RESET** button.
  - Press and release the **POWER** button.
  - Wait until the monitor alarms. Now release the **RESET** button.
  - Briefly press and release the **RESET** button again.
  - The SmartMonitor 2 beeps every 10 seconds whenever it is in the Communications Mode. This is a reminder that the SmartMonitor 2 is powered on for working with the computer, memory card, or modem, but *not* for monitoring the infant.

Do nto connect the infant to the SmartMonitor 2 when in the Communications Mode, the spnea and heart rate alarms are not operational in this mode.

- The dealer should now call to retrieve the information. The phone may ring, but do not answer. The modem answers the call and connects the SmartMonitor 2 to the computer through the phone line.

Transferring SmartMonitor 2 Data to a Memory Card

The Memory Card is a credit-card-sized electronic memory transfer device that transfers monitor data. *This is an optional feature of SmartMonitor 2 and may not be installed on every unit.*
All data in the memory card at the time of a download will be over written. For more information refer to Setting Alarms and Recording Limits section of this manual. When you are ready to use the Memory Card to transfer SmartMonitor 2 data, follow the steps below:

- Make sure the SmartMonitor 2 is **off**.
- With the Memory Card facing you slide into the slot provided on the side panel of the SmartMonitor 2. The location of the memory card logo will be on the bottom edge and facing you.
- Press the **POWER** button ON. After a short delay, the display will read:

  INITIALIZING PLEASE WAIT

Then,

  MENU MODE? ENTER PROPER KEY SEQUENCE

- Press the keys in the following sequence within 10 seconds:
- Press the **ENTER** button.
- The display will read SmartMonitor 2 MENU SELECTION.
- Press the arrow until you see "Move Data To Card?
- Press the **ENTER** button. The word NO will begin to blink. To select **YES** press either arrow button.

Press the **ENTER** button. The display will now show Transferring Data... Once the transfer is complete the display will change to Data Transferred. If the card has data on it the following is display after selecting YES to move data to the card.

- The display may show card full - overwrite?
- Press the Enter button. The word NO will begin to blink. To select YES press either arrow button.
- Press the Enter button. The display will now show Transferring Data...Once the transfer is complete the display will change to Data Transfered.

The memory in the monitor will not be automatically cleared. The recordedata in the SmartMonitor 2 will be "Flagged" as downloaded information and, if it is not cleared before the next download, the Synergy-E software will exclude those duplicated events. Synergy-E has the ability to retrieve all the data if desired. Refer to the Synergy-E Manual for more information.

Transferring SmartMonitor 2 Data Using a Computer

The SmartMonitor 2 data can be downloaded by Direct Connection to a computer. The Synergy-E software is required to download the SmartMonitor 2.
The SmartMonitor 2 can be placed in Communication Mode or Monitoring Mode. If Monitoring Mode is chosen, all alarms and record parameters are functional.

Communications Mode Setup

- Connect the download cable to the I/O connections port on the monitor and the COM Port on the computer
- The monitor can be placed in Communications Mode
- Press and hold the blue **RESET** button.
- Push the **POWER** button to on.
- Wait until the monitor alarms constantly.
- Release the **RESET** button and briefly press and release the **RESET** button again.
- The SmartMonitor 2 beeps every 10 seconds when it is in the Communications Mode but is not electronically connected or linked to anything. This is a reminder that the SmartMonitor 2 is powered on for working with the computer, memory card, or modem, but not for monitoring the infant.
  If there is an emergency and access to the telephone is required, remove phone cord from modem slot and use a different phone.

Chapter 5: Routine Maintenance

5.1 Overview 5-2
5.2 Cleaning Instructions 5-2

Chapter 5: Routine Maintenance

5.1 Overview

The SmartMonitor 2 Infant Apnea Monitor was designed to be simple and easy to use. This chapter provides guidelines for proper cleaning and maintenance procedures.

5.2 Cleaning Instructions

Turn the monitor OFF, unplug it from the electrical outlet, and disconnect all accessories before you begin cleaning.

Never immerse the monitor or any of the accessories in water in water or spray cleaner directly on them. Apply water or cleaner to a soft cloth and gently wipe the components to clean them.

Monitor, Power Cord/Battery Charger and Lead Wires

- Use a clean cloth and any of the following:
  - Unscented dishwashing detergent
  - 3% hydrogen peroxide solution (the kind found in most stores) to clean the monitor unit.
  - 91% Isopropyl alcohol
  - 10% bleach solution
  - Germicidal Cloth

Electrodes

- Do not attempt to clean the disposable style electrodes.
- Clean the carbon electrodes with a mild soap and water. They must be rinsed well to remove any traces of soap film. Soap film can prevent heart and breathing signals from being picked up clearly from the monitor.
- Insure that the electrodes are completely dry before using.

Soft Carrying Case

- Although the care label in the carrying case suggests machine washing in warm water, the appearance of the carrying case will change noticeably after washing.
- Respironics recommends that you wipe the case with a damp cloth or sponge using a light detergent, if necessary. Air-dry only.

Chapter 6: Troubleshooting and Diagnostics

6.1 Overview 6-2
6.2 Troubleshooting Table 6-3

Chapter 6: Troubleshooting and Diagnostics

6.1 Overview

This troubleshooting section is provided as a guide to help the technician determine what is wrong with the SmartMonitor 2. It should also be used to determine what parts, if any, need to be replaced.

6.2 Troubleshooting Table

Symptom	Possible Cause	Corrective Action
• Monitor will not Operate	• Monitor is disconnected from power cord/battery charger, battery drained • No Power at outlet • Defective power cord/battery charger • Internal part failure	• Plug power cord/battery charger into Monitor and outlet. • Locate an outlet with power. • Contact Respironics • Contact Respironics
• All lights will flash together and the alarm will beep in unison with the flashing lights. Pressing RESET will not silence alarm.	• Internal error condition detected by SmartMonitor 2	• Reduce likelihood of electrostatic discharge around the SmartMonitor 2. Contact Respironics. If an Error number is displayed on the LCD (the LCD is located on the bottom of the monitor), record this information. Contact Respironics. If there is an internal software error, a special power off procedure is required. Press and hold the RESET button, while still holding down the RESET button press and hold the POWER button. Hold both buttons for 5 seconds. Release POWER button, continue to hold the RESET button until the monitor turns off.

Troubleshooting Table (Continued)

Symptom	Possible Cause	Corrective Action
• All lights will flash together and the alarm will beep in unison with the flashing lights. Pressing RESET will not silence alarm. (continued)	• Incorrect Power-Off Sequence.	• Press the POWER button and ensure that the power light is illuminated. • Press and hold the RESET button. Press and release POWER. Wait two seconds, then release the RESET button.
	• No power, battery drained.	Connect power cord/battery charger. Use Power-Off to silence alarm. • Press and hold the blue RESET button. • Press and release the gray POWER button. Wait 2 seconds, then release the RESET Button. Prior to use, allow battery to charge 6 hours.
	• Internal part failure.	• Contact Respironics.
• Alarm sounds weak.	• Internal part failure. • Low battery	• Contact Respironics. • Charge battery
• Loose lead Light remains on.	• Connections between electrodes, lead wires, and patient cable are not properly made.	• Verify that a. baby's skin underneath electrodes is clean. b. electrodes are clean and lead wires are fully inserted into the electrodes and patient cable.
	• Defective lead wires. • Defective electrodes. • Internal part failure.	• Replace lead wires and perform Functional Self-Test. • Replace electrodes. • Contact Respironics

Chapter 7: Repair and Replacement

7.1 Overview 7-2

7.2 SmartMonitor 2 Repair Kits 7-4

7.3 Accessories 7-7

7.4 Replacement Instructions 7-9

Chapter 7: Repair & Replacement

7.1 Overview

Figure 7-1 list the names and identifies the major replaceable components in the SmartMonitor 2. The photo provides a quick reference and overview of the device. With in each replacement section, more detailed support photos are provided to illustrate the exact component location and replacement procedure(s).

Refer to Section 8.1 for testing that is required after componentreplacement.

If you require technical assistance during any of these procedures, contact:

Respironics Technical Service

Phone: 1-800-345-6443

International: 724-733-0200
FAX: 1-800-422-5816
(U. S. and Canada) or 724-733-0299

E-Mail service@respironics.com

If you need replacement kit ordering information, contact:

Respironics Customer Satisfaction
Phone: 1-800-345-6443
(U. S. and Canada) or 724-733-0200

FAX: 1-800-866-0245 (U. S. and Canada)
or 724-387-5012

Visit Respironics Home Page on the World Wide Web at:
www.respironics.com

7.1.1. Component Identification

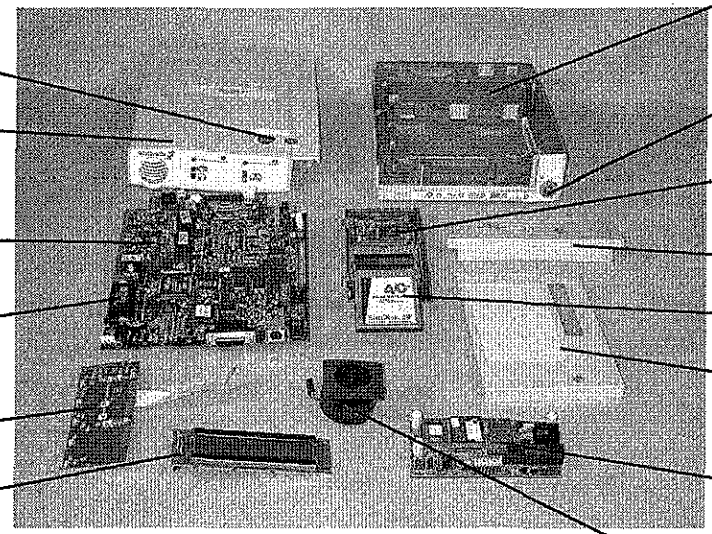

Figure 7-1
SmartMonitor 2
(Component Identification)

7.2 SmartMonitor 2 Repair Kits

Replacement Part	Replacement Part No.	Page No.
Audible Alarm	1008033	7-9
Battery Door*	H2500-63	N/A
Bottom Enclosure Assembly	1008025	7-10
Clear Feet (x4) *	H2500-67	N/A
Enclosure Hardware* Includes: Velcro® Hook 3 inch EMI Gasket Clear Foot (x4) EMI Contact Donut (x2) Screw #6-32x3/8" LG.PH.RD.HD.SS (x4) Screw #6-32x1/4" LG.PH.PAN HD Nylon (x4) Screw #6-19x3/8" LG.PH.PAN HD Plastite (x4)	H2500-57	N/A

* Replacement Part not shown in a detailed description

SmartMonitor 2 Repair Kits (Continued)

Replacement Part	Replacement Part No.	Page No.
Front Panel Display	1008034	7-12
Labels Kit * Includes: Battery Compartment Label Battery Door Outside Label I/O Panel Label Industry Canada, Label Patient Connector Label Warnings Label	1008027	N/A
LCD Display	1008024	7-13
Main PCB	1008023	7-14
Modem PCB	H2500-53	7-15
Patient Connector - (Plastic) old style	# 1008028 #103-19	7-16

* Replacement Part not shown in a detailed description

SmartMonitor 2 Repair Kits (Continued)

Replacement Part	Replacement Part No.	Page No.
PCMCIA Door *	H2500-64	N/A
PCA Hardware* Includes: Screw #6-32x3/16", PHP, Nylon (x6) Screw #4-40x1/4", PH.PAN (x8) Standoff, #4-40x5/8", F-F, 3/16 HEX, N (x4) Spacer, #6-32x9/16", F-F, Nylon, 1/4" HEX (x3)	1008029	N/A
PCMCIA Drive	H2500-54	7-17
Real Time Clock	H2500-66	7-19
Top Enclosure	1008026	7-21

* Replacement Part not shown in a detailed description

7.3 SmartMonitor 2 Accessories

Accessory	Reorder No.
SmartMonitor 2 Remote Alarm, Alarm Cable 100 feet	900/100
SmartMonitor 2 Soft Carrying Case	H407
SmartMonitor 2 Replacement Battery	418
SmartMonitor 2 Parents' Guide	424
SmartMonitor 2 Professional Manual	H425
SmartMonitor 2 Checkout Procedure	H580-4000-00
SmartMonitor 2 Remote Alarm	990
SmartMonitor 2 Memory Card, 10MB	H4004
SmartMonitor 2 Patient Cable	H4005
SmartMonitor 2 Host Download Cable	H4006
SmartMonitor 2 Battery	H4008
SmartMonitor 2 Power Cord/Battery Charger Domestic	H4009
SmartMonitor 2 Auxiliary Interface Box	4010

SmartMonitor 2 Accessories (continued)

Accessory	Reorder No.
SmartMonitor 2 Power Cord/Battery Charger 230VAC/50HZ International	H4011
SmartMonitor 2 Simulator, ECG/Respiration	5000
Small Disposable Sticky Electrodes, 3 per set / Pkg of 5 sets	9510
Large Disposable Sticky Electrodes, 3 per set / Pkg of 5 sets	9515
Safety Lead Wires, Pin-to-Socket, 24 in., .080 in. socket	9520-1
Safety Lead Wires, Pin-to-Socket, 40in.,.080 in. socket. 5 pair per package	9521-1
Start-up Accessory Kit, 6 electrode belts, 6 carbon electrodes and 6 safety pin to socket lead wires.	9916-12
Accessories Starter Kit, 2 electrode belts, 2 pair reusable electrodes, 2 pair of pin to socket lead wires	9916
Electrodes, Reusable	16510-1
Electrode Belt	16530-1

7.4 Replacement Instructions

7.4.1 Audible Alarm Replacement Kit

Replacement Part Number	1008033
Included in Kit:	**Tools Required:**
Audible Alarm	*Small Phillips® Blade Screwdriver*

Procedure

Removed / Installed During Process:

Top Enclosure
Audible Alarm

WARNING: To prevent electrical shock hazard, disconnect the SmartMonitor 2 device from the computer before changing the battery or attempting any repairs to the device

CAUTION: Electronic components used in this device are subject to damage from static electricity. Repairs made to this device must be performed only in an antistatic, ESD-protected environment.

Step 1 — Remove the 4 screws from the bottom of the unit.

Step 2 — Remove the top enclosure. Be carefull not to pull the power/reset cable from the main pca.

Step 3 — Disconnect the Power/Reset cable from the main PCA.

Step 4 — Disconnect the Audible Alarm. Replace with new audible alarm. *Insure the black wire is positioned to* the left of the unit.

Step 5 — Reassemble by reversing steps 1-4.

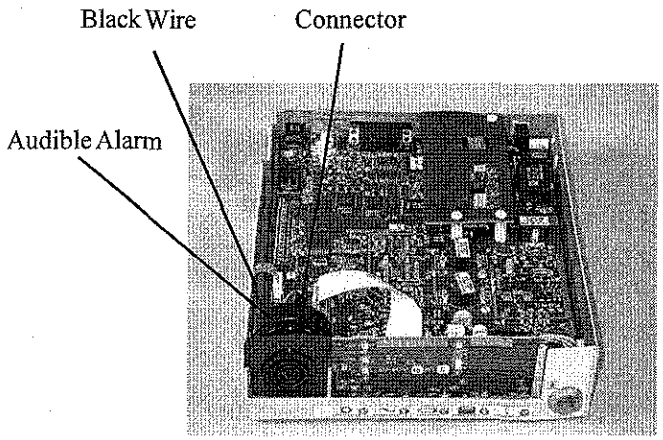

Figure 7-2

Be sure that when replacing the top cover, the Power , Alarm and Reset Switch wires are not pinched.

7.4.2 Bottom Enclosure Assembly Replacement

Replacement Part Number	1008025
Included in Kit:	**Tools Required:**
Bottom Enclosure	Small Phillips® blade screwdriver

Procedure

Removed / Installed During Process:

- Battery and Battery Cover
- PCMCIA Cover
- PCMCIA Card (if applicable)
- Top Enclosure
- Main PCA

WARNING: To prevent electrical shock hazard, disconnect the SmartMonitor 2 device from the computer before changing the battery or attempting any repairs to the device

CAUTION: Electronic components used in this device are subject to damage from static electricity. Repairs made to this device must be performed only in an antistatic, ESD-protected environment.

(See photo illustration on next page)

Step 1	Remove the battery cover and battery.
Step 2	Remove the PCMCIA cover.
Step 3	Remove the PCMCIA card (if still inserted)
Step 3	Remove the 4 screws from the bottom of the unit.
Step 4	Remove the top enclosure.
Step 5	Disconnect the Power/Reset cable from the main PCA. (Lift up on the connector to remove the ribbon cable)
Step 6	Disconnect the Audible Alarm.
Step 7	Disconnect the Patient Disconnect cable.
Step 8	Disconnect the Front Panel Display "LE"
Step 9	Remove the 4 screws located on the main pca.
Step 10	Remove board from bottom enclosure.
Step 11	Place board into new bottom enclosure.
Step 12	Install new labels using the old bottom enclosure as a template.
Step 13	Reassemble the unit by reversing steps 1-9.

Bottom Enclosure Assembly Replacement (continued)

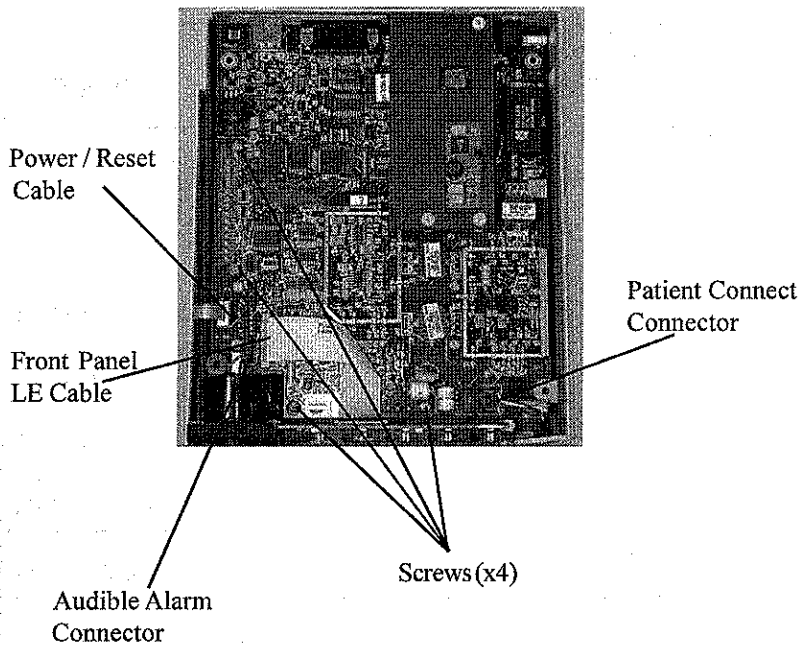

Figure 7-3

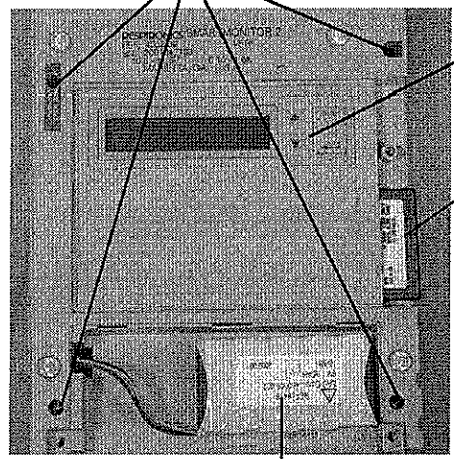

Figure 7-4

7.4.3 Front Panel Display Replacement

Replacement Part Number	1008034
Included in Kit:	**Tools Required:**
Front Panel Display	Small Phillips® Blade screwdriver

Procedure

Removed / Installed During Process:

- Top Enclosure
- Front Panel Display

WARNING: To prevent electrical shock hazard, disconnect the SmartMonitor 2 device from the computer before changing the battery or attempting any repairs to the device

CAUTION: Electronic components used in this device are subject to damage from static electricity. Repairs made to this device must be performed only in an antistatic, ESD-protected environment.

Step 1	Remove four screws in the bottom of the unit.
Step 2	Remove the top enclosure (be sure to disconnect the Power/Reset cable)
Step 3	Disconnect the cable from the PCA to the front panel
Step 4	Pull the Front Panel Display board up until it is clear of the unit.
Step 5	Slide the new board (cable facing the inside of the unit) into the existing slots.
Step 6	Connect the cable to the main PCA.
Step 7	Reconnect the Power/Reset cable to main PCA.
Step 8	Place the top enclosure on the unit.
Step 9	Secure the unit with the four screws.

7.4.4 Liquid Crystal Display (LCD) Replacement

Replacement Part Number	**1008024**
Included in Kit:	**Tools Required:**
LCD Display	Small Phillips® Blade Screwdriver

Procedure

Removed / Installed *During Process:*

- Back Cover
- Top Enclosure
- LCD

WARNING: To prevent electrical shock hazard, disconnect the SmartMonitor 2 device from the computer before changing the battery or attempting any repairs to the device

CAUTION: Electronic components used in this device are subject to damage from static electricity. Repairs made to this device must be performed only in an antistatic, ESD-protected environment.

Step 1	Remove the back cover.
Step 2	Remove the four screws in bottom enclosure.
Step 3	Remove the top enclosure (be sure to disconnect the Power / Reset cable before removing the top completely)
Step 4	Remove the Main PCA and four screws.
Step 5	Disconnect the LCD cable from the main board.
Step 6	Using a flat blade screwdriver, pry the corner edge of the LCD. Carefully pull the LCD until completely removed.
Step 7	Use Alcohol to clean any glue residue remaining on the unit.
Step 8	Install the new LCD Display. Be sure to reconnect the cable to the main board.
Step 9	Reassemble the unit by reconnecting the Power / Reset cable, top and bottom enclosure.

7.4.5 Main PCB Replacement

Replacement Part Number	1008023
Included in Kit:	**Tools Required:**
Main PCA	Small Phillips® Blade Screwdriver

Procedure

Removed / Installed During Process:

- Back Cover
- Top Enclosure
- Front Panel LE
- Modem PCB (if applicable)
- Main PCA
- PCMCIA Drive

WARNING: To prevent electrical shock hazard, disconnect the SmartMonitor 2 device from the computer before changing the battery or attempting any repairs to the device

CAUTION: Electronic components used in this device are subject to damage from static electricity. Repairs made to this device must be performed only in an antistatic, ESD-protected environment.

Step 1 Remove the back cover.

Step 2 Remove the top enclosure by removing the four screws in the bottom enclosure (be sure to disconnect the Power / Reset cable before removing the top completely)

Step 3 Disconnect the LCD cable from the main board.

Step 4 Disconnect the audible alarm connector.

Step 5 Disconnect the Front Panel LE cable from the main board.

Step 6 Disconnect the Patient Disconnect cable.

Step 7 Remove the Front Panel LE by pulling up.

Step 8 Remove the board by removing the four Phillips® blade screws from the main board. (See photo illustration on page 7-3)

Step 9 Remove the Modem Assembly, if applicable. (3 nylon screws on the bottom of the PCA.

Step 10 Remove the board from the bottom enclosure.

Step 11 Remove the PCMCIA Drive.

Step 12 Replace by reversing step 1-11.

7.4.6 Modem Replacement

Replacement Part Number	**H2500-53**
Included in Kit:	**Tools Required:**
Modem PCB	Small Phillips® Blade Screwdriver

Procedure

Removed / Installed During Process:

- Back Cover
- Top Enclosure
- Modem

WARNING: To prevent electrical shock hazard, disconnect the *SmartMonitor 2 device from the computer before* changing the battery or attempting any repairs to the device

CAUTION: Electronic components used in this device are subject to damage from static electricity. Repairs made to this device must be performed only in an antistatic, ESD-protected environment.

Step 1 Remove the back cover.

Step 2 Remove the four screws in bottom enclosure.

Step 3 Remove the top enclosure (be sure to disconnect the Power / Reset cable before removing the top completely)

Step 4 Remove the existing modem by removing three nylon screws and pulling up on the PCB.

Step 5 Place the new modem into the 16 pin connector and reinstall the three nylon screws. Be sure the jack is accessible through the opening in bottom enclosure.

Step 6 Reassemble by reversing Steps 1-3.

7.4.7 Patient Connector Replacement

Replacement Part Number	1008028
Included in Kit:	**Tools Required:**
Patient Connector	Small Phillips® blade screwdriver

Procedure

Removed / Installed During Process:

- Back Cover
- Top Enclosure
- Patient Connector

WARNING: To prevent electrical shock hazard, disconnect the SmartMonitor 2 from the computer before changing the battery or attempting any repairs to the device.

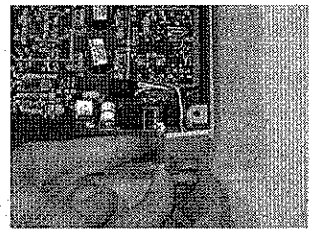

Figure 7-5

Step 1	Remove the back cover.
Step 2	Remove the four screws in bottom enclosure.
Step 3	Remove the top enclosure (be sure to disconnect the Power / Reset cable before removing the top completely)
Step 4	Disconnect and remove the Front Panel Display.
Step 5	Disconnect the Patient Disconnect connector from the main board.
Step 6	While holding the back of the connector, unscrew the ring on the front of the unit. (see photo 7-5)
Step 7	Remove the existing connector and replace it with the new connector.
Step 8	Once installed connect the connector to the main board.
Step 9	Reassemble by reversing Steps 1-4

If having difficulties with the removal or replacement, you may need to remove the entire main board to allow more working space.

7.4.8 PCMCIA Drive Replacement

Replacement Part Number	**H2500-54**
Included in Kit:	**Tools Required:**
PCMCIA Drive	Small Phillips® Blade Screwdriver

Procedure

Removed / Installed During Process:

Battery and Battery Cover
PCMCIA Cover
PCMCIA Card (if applicable)
Top Enclosure
Main PCA
PCMCIA Drive

WARNING: To prevent electrical shock hazard, disconnect the SmartMonitor 2 device from the computer before changing the battery or attempting any repairs to the device

CAUTION: Electronic components used in this device are subject to damage from static electricity. Repairs made to this device must be performed only in an antistatic, ESD-protected environment.

Step 1	Remove the battery cover and battery.
Step 2	Remove the PCMCIA cover.
Step 3	Remove the PCMCIA card (if applicable).
Step 3	Remove the 4 screws from the bottom of the unit.
Step 4	Remove the top enclosure, (be sure to disconnect the Power / Reset cable before removing the top completely).
Step 5	Disconnect the Power/Reset cable from the main PCA.
Step 6	Disconnect the Audible Alarm and remove it.
Step 7	Disconnect the Patient Disconnect cable.
Step 8	Disconnect the Front Panel Display "LE".
Step 9	Remove the 4 screws located on the main pca.
Step 10	Remove board from bottom enclosure.

PCMCIA PCB Replacement (continued)

Step 11	Remove the PCMCIA by pinching the two Nylon spacers with pliers and pulling up on the PCMCIA detaching the 60 pin connector.
Step 12	Attach two Nylon Spacers to the replacement PCMCIA board.
Step 13	Attach two spacers to the replacement board by using PH screws.
Step 14	Line up the 60 pin connector and press one end into place. Then press the end with the nylon spacers snapping into place.
Step 15	Reassemble by reversing steps 1-10

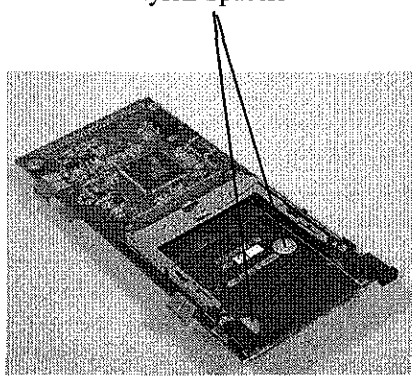

Figure 7-6

7.4.9 Real Time Clock Replacement

Replacement Part Number	**H2500-66**
Included in Kit:	**Tools Required:**
Real Time Clock	Small Phillips® Blade Screwdriver Soldering Iron

Procedure

Removed / Installed During Process:

Battery cover and Battery	Main PCA
PCMCIA Cover	PCMCIA Drive
PCMCIA Card (if applicable)	Modem
Top Enclosure	Real Time Clock

WARNING: To prevent electrical shock hazard, disconnect the SmartMonitor 2 device from the computer before changing the battery or attempting any repairs to the device

CAUTION: Electronic components used in this device are *subject to damage from static electricity. Repairs* made to this device must be performed only in an antistatic, ESD-protected environment.

Step 1	Remove the battery cover and battery.
Step 2	Remove the PCMCIA cover.
Step 3	Remove the PCMCIA card (if applicable).
Step 3	Remove the 4 screws from the bottom of the unit.
Step 4	Remove the top enclosure, (be sure to disconnect the Power / Reset cable before removing the top completely).
Step 5	Disconnect the Power/Reset cable from the main PCA.
Step 6	Disconnect the Audible Alarm and remove it.
Step 7	Disconnect the Patient Disconnect cable.
Step 8	Disconnect the Front Panel Display "LE".
Step 9	Remove the 4 screws located on the main pca.
Step 10	Remove board from bottom enclosure.

Real Time Clock Replacement (continued)

Step 11 Remove the PCMCIA by pinching the two Nylon spacers with pliers and pulling up on the PCMCIA detaching the 60 pin connector.

Step 12 Remove the modem. (if applicable)

Step 13 Unsolder the 20 pins of the Real Time Clock from the Main PCB.

Step 14 Insert the replacement Real Time Clock and solder.

Step 15 Inspect the through holes and adjoining traces for damage or solder bridges.

Step 16 Reassemble by reversing this procedure.

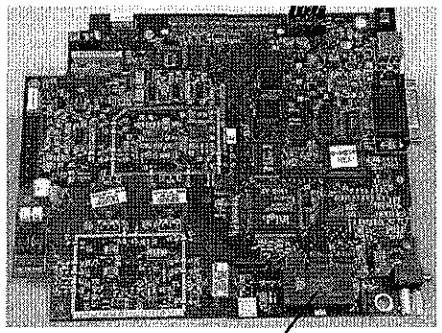

Real Time Clock

Figure 7-7

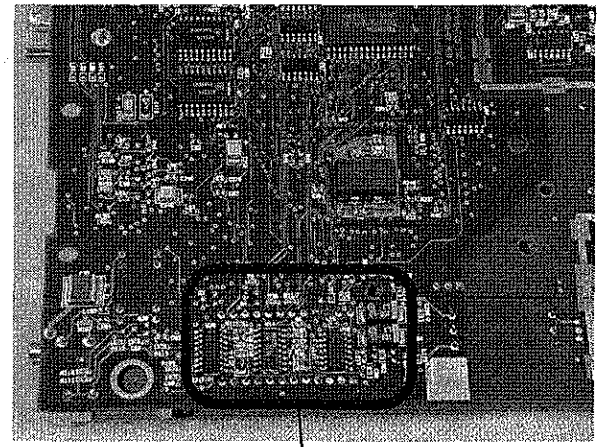

20 Pins

Figure 7-8

7.4.10 Top Enclosure Replacement

Replacement Part Number	**1008026**
Included in Kit:	**Tools Required:**
Top Enclosure	Small Phillips® Blade Screwdriver

Procedure

Removed / Installed During Process:

Back Cover
Top Enclosure

WARNING: To prevent electrical shock hazard, disconnect the SmartMonitor 2 device from the computer before changing the battery or attempting any repairs to the device

CAUTION: Electronic components used in this device are subject to damage from static electricity. Repairs made to this device must be performed only in an antistatic, ESD-protected environment.

Step 1 Remove the back cover.

Step 2 Remove the four screws in bottom enclosure.

Step 3 Remove the top enclosure (be sure to disconnect the Power / Reset cable before removing the top completely)

Step 4 Reassemble by reversing this procedure.

Chapter 8: Verification

Checkout Procedures 8-2

SmartMonitor 2 Test Data Sheet 8-8

Introduction

The intention of the section of the manual is to provide procedures to determine if the Respironics Model 4000 series SmartMonitor 2 and their accessories are suitable for the use in patient applications. These procedures require the use of a calibrated Model 5000 Simulator, which is the source of ECG and respiratory test signals. No other simulators are acceptable for use with these procedures.

The Smartmonitor 2 must pass all of the procedures before use on patients.

Needed Equipment

Model 4000 series SmartMonitor 2
Model 5000 ECG/Respiration Simulator
Model 9520-1 Safety Lead Wires
Model 4005 Patient Cable
Model 990 Remote Alarm
Stopwatch

Checkout Procedure for SmartMonitor 2

Important things to remember as the checkout procedure is being done:

Complete all checkout procedures in one continuous operation. Complete all checkout procedures in the order described in the manual. If you have not performed the checkout before, please read and understand the manual before starting the checkout procedure.

Do not place the SmartMonitor 2 or the Simulator near electrical appliances that could cause interference (i.e., cordless or cellular telephones, air conditioners, vaporizers, computers, TV's, VCR's, microwave ovens etc.)

Coiling and/or manipulation of the patient cable or lead wires should be minimized.

Once changes are made on the simulator, do not maintain hand contact with the simulator knobs or enclosure. It may affect the ECG and respiration signals.

Because the signal from the simulator is interrupted by each change in the simulator setting, allow approximately ten seconds after each setting change for the monitor circuitry to stabilize.

In the section of Establishing Initial Alarm Set Points of the checkout procedure, the changes to the alarm parameters of the SmartMonitor 2 should be made through the menu display located on the bottom panel of the SmartMonitor 2.

The 5000 Simulator will not function correctly if the 9-volt battery is low. It should be replaced monthly or more often with heavy use. The battery voltage can be too low for calibrated output signals before activation of the LOW BATTERY light.

The SmartMonitor 2's memory should be cleared before performing the checkout procedure.

The 990 Remote Alarm may be verified throughout the checkout procedures. The Remote Alarm will not function correctly if the 9-volt battery is low. It should be replaced monthly or more often with heavy use.

Establishing Initial Alarm Set Points

Remove the Menu Display cover from the bottom of the SmartMonitor 2. Not the three buttons to the right of the LCD display - UP arrow ▲ button, the DOWN arrow ▼ button, and the ENTER button.

To access the Menu Mode for the SmartMonitor 2:
Press the **POWER** button **ON**.
Within ten seconds, enter the following key code:
Press the **DOWN** arrow once.
Press the **Up** arrow twice.
Press the **ENTER** button three times.

While in the Menu Mode, the SmartMonitor 2 will beep every 10 seconds. This is to remind you that the SmartMonitor 2 is not monitoring and to power off the SmartMonitor 2 after parameters are set.

To Set a specific parameter or series of parameters:

Use the UP arrow button to move forward to the parameter to be changed.
Select the parameter to be changed by pressing the ENTER key - this will cause the current value to flash
The value can be increased by pressing the UP arrow button and decreased by pressing the DOWN arrow button..
To select the displayed value, press the ENTER button. The value displayed will continue to flash until you press the ENTER button.
Press the UP arrow button to proceed to the next parameter to be selected.
Press the UP arrow to display CLEAR MEMORY?, then clear the memory.
For the purposes of this check out procedure, set the SmartMonitor 2 parameters to the following values.

Parameter	Value	Parameter	Value
Patient Name	Test	Heart Rate Record	YES
Patient ID number	1234	ECG Record	YES
STD Alarm Parameters	Are Selected	Auxiliary 1 Record	OFF
STD Record Parms	Not Selected	Auxiliary 2 Record	OFF
STD System Parms	Not Selected	Auxiliary 3 Record	OFF
Apnea Alarm	20 Seconds	Auxiliary 4 Record	OFF
Low Breath Rate Alarm	OFF	External Physiological Trigger	OFF
Bradycardia Alarm	80 BPM	External Equipment Trigger	OFF
Bradycardia Alarm Delay	5 seconds	Date	Current Date
Tachycardia Alarm	230 BPM	Time	Current Time
Tachy Alarm Delay	0 seconds	Rate Display	ON
Record Mode	EVENT	Phone Number for Computer	(___-____)
Apnea for Record	16 Seconds	Time to Call the Computer	(__/__/__ __:__)
Brady for Record	90 BPM	Call Computer when Memory Is Full	OFF
Pre/Post Time	45/15	Move Data to Card	NO
Impedance Record?	YES	Memory Status	0 Percent Full
Record Respiration Rate	YES	Clear Memory	NO

If you press the DOWN arrow button to move forward through the list after these parameters have been entered, the first tow parameters - Standard Alarm Parameters and Standard Record Parameters will both read *Not Selected.* DO NOT change these two parameters to *Are Selected - Yes.*

After the designated checkout parameters are entered, turn the SmartMonitor 2 off using the proper Power-Off procedure:

Press and Hold the RESET button.
Press and release the POWER button.
Wait two seconds then release the RESET button.

The Functional Self-Test

1. Plug the Battery Charger into a grounded, live wall outlet and connect the other end into the receptacle on the back of the SmartMonitor 2 Labeled DC POWER. The CHARGER light on the front of the SmartMonitor 2 should come on and remain on continuously.
2. Insert the patient cable into the receptacle labeled Patient Input on the front of the SmartMonitor 2.
3. Insert the lead wires into the Functional Self-Test socket on the side panel of the SmartMonitor 2.
4. Insert the WHITE lead (RA) wire into the "RA" socket of the patient cables. Insert the BLACK lead wire into the "LA" socket of the patient cable.
5. Connect the lead wires to the Functional Self-Test recep tacles on the side of the SmartMonitor 2. Insert the pin end of the WHITE lead wire into the receptacle labeled "RA". Insert the pin end of the BLACK lead wire into the receptacle labeled "LA"
6. If you are using the Remote Alarm, connect it to the REMOTE ALARM output on the back of the Monitor at this time. Turn the Remote Alarm power to on. Each time the Monitor Alarms verify that the sound can be heard through the Remote Alarm and that the Monitor light on the Remote Alarm comes on.

When using a stopwatch, timing should begin after the power button has been pressed.

7. Press the POWER button to turn the SmartMonitor 2 on. The alarm should beep and all the lights should come on for approximately 4 seconds. After all the alarm lights turn off, the CHARGER and POWER light should remain on, within 15 seconds the green HEART and RESPIRATION light should be blinking. The lights will continue to flash for about 45 seconds.

If the following lights remain on or are blinking, and/or the alarm sounds continuously, corrective action should be taken before continuing the Checkout Procedure.

Low Battery - The SmartMonitor 2 battery pack is dis charged. Turn the SmartMonitor 2 off using the correct power-off procedure. Make sure the battery Charger is plugged into a live power outlet and properly connected to the SmartMonitor 2. Allow the SmartMonitor 2 to re charge for 8 hours before performing the Checkout Procedure. *This will provide fully charged battery power.*

Full Memory - The SmartMonitor 2's memory is 80% to 100% full. If the SmartMonitor 2 has been used on patients, the memory should be transferred to a Memory Disk, then cleared using the procedure described in the Professional Operator's Manual.

Loose Connection - Indicates loose or bad lead wires or patient cable. Check all connections and/or replace lead wires first, then patient cable if necessary.

8. After approximately 45 seconds, the green HEART and RESPIRATION lights should stop blinking. The red LOW light should illuminate within approximately seven seconds after the HEART light stops flashing, and the audible alarm should beep once every second.
9. Approximately 20 seconds after last Respiration detection the Red Apnea light should illuminate. (There should be no green HEART or RESPIRATION lights during this alarm.) When the APNEA light illuminates, the Functional Self-Test is complete
10. Turn the Remote Alarm off.
11. Turn the SmartMonitor 2 off using the correct Power-off procedure.
12. Press and hold the RESET button.
13. Press and release the POWER button.
14. Release the RESET button.
15. If the SmartMonitor 2 is not powered off correctly, the alarm will sound continuously. This is the "sibling" alarm. To correct a "sibling" alarm, press and hold the RESET button, press and release the POWER button, wait two seconds, then release the RESET button. Repeat the proper Power-Off procedure as described above until power is off.

Checkout Setup

The Battery Charger and the Patient Cable should remain connected to the SmartMonitor 2, as they were in the Functional Self-Test.

Disconnect the lead wires from the Self-Test connectors of the SmartMonitor 2. Loosen the binding post caps (labeled "RA" and "LA") on the Model 5000 Simulator under THREE LEAD ECG/RESP.

Insert the white lead wire into the post-labeled "RA". Insert the black lead wire into the post-labeled "LA" Tighten both post caps on the Simulator.

Set the Simulator Controls as Follows:

Simulator Setting	
ECG Beats/Min	100
ECG AMPL/MV	0.5
RESP. Breaths/Min	30
Variation OHMS	1
Base Impedance OHMS	200

Turn the Simulator POWER on.

Turn the SmartMonitor 2 power on and proceed to Verification of ECG Signal Sensitivity.

Verification of the ECG Signal Sensitivity for SmartMonitor 2

There are 11 test points that require different simulator settings. For each test point, make the required changes as listed in the following table and verify the appropriate SmartMonitor 2 response. A Simulator setting value that changes from the previous Test Set Up are in **BOLDED TEXT**. Press the **RESET** button on the SmartMonitor 2 to reset any alarm faults.

Due to large signal changes that result when Simulator settings are initially changed, the off-scale signal recognition circuitry of the SmartMonitor 2 may activate and cause brief pauses in detection. Once stabilize before proceeding with verifying the operation of the SmartMonitor 2.

8.1 SmartMonitor 2 Test Data Sheet (Page 8-8 through 8-17)

Low ECG Verification

Test Point	Simulator Setting		Detection	Low Heart Alarm	Pass
1	ECG Beats/Min	25	YES	YES	
2	ECG Beats/Min	50	YES	YES	
3	ECG Beats/Min	75	YES	YES	
4	ECG Beats/Min	85	YES	YES	

Simulator Settings for Test Set Up	
ECG Amplitude/MV	**0.2**
Respiration Breaths/Min	30
Variation Ohms	1
Base Impedance Ohms	200

Test Point	Simulator Setting		Detection	High Heart Alarm	Pass
5	ECG Beats/Min	100	YES	NO	
6	ECG Beats/Min	150	YES	NO	

Simulator Settings for Test Set Up	
ECG Amplitude/MV	0.2
Respiration Breaths/Min	30
Variation Ohms	1
Base Impedance Ohms	200

7	ECG Beats/Min	200	YES	NO	
8	ECG Beats/Min	240	YES	YES	

Simulator Settings for Test Set Up	
ECG Amplitude/MV	**0.5**
Respiration Breaths/Min	30
Variation Ohms	1
Base Impedance Ohms	200

Amplitude ECG Verification

Test Point	Simulator Setting		Detection	Low Heart Alarm	Pass
9	ECG Beats/Min	25	NO	YES	
10	ECG Beats/Min	85	NO	YES	
11	ECG Beats/Min	200	NO	YES	

Simulator Settings for Test Set Up	
ECG Amplitude/MV	**0.0**
Respiration Breaths/Min	30
Variation Ohms	1
Base Impedance Ohms	200

Verification of Respiration Signal Sensitivity

Simulator Setting for test Set up	
ECG Beats/Min	200
ECG AMPL/MV	**0.5**

Apnea Should Occur Approximately 20 Seconds after last respiration detection.

There are 14 test points that require different simulator settings. For each test point, make the required changes as listed in the following table and verify the appropriate SmartMonitor 2 response. A Simulator setting value that changes the same from the previous Test Set Up are in **BOLDED TEXT**. Press the RESET button on the SmartMonitor 2 to reset any alarm faults.

Test Point	Simulator Setting		Detection	Apnea Alarm	Pass
	Resp. Breath/Min	10			
1	Variation OHMS	1	YES	NO	
	Resp. Breath/Min	15			
2	Variation OHMS	0	NO	YES	
3	Variation OHMS	1	YES	NO	
	Resp. Breath/Min	30			
4	Variation OHMS	0	NO	YES	
5	Variation OHMS	0.2	YES	NO	
	Resp. Breath/Min	50			
6	Variation OHMS	0	NO	YES	
7	Variation OHMS	0.2	YES	NO	
	Resp. Breath/Min	75			
8	Variation OHMS	0	NO	YES	
9	Variation OHMS	1	YES	NO	
	Resp. Breath/Min	100			
10	Variation OHMS	1	YES	NO	
	Resp. Breath/Min	120			
11	Variation OHMS	1	YES	NO	

Simulator Setting for Test Set Up	
ECG Beats/Min	85
ECG AMPL./MV	0.5

	Resp. Breath/Min	150			
12	Variation OMS	2	YES	NO	

Due to large signal changes that result when Simulator settings are initially changed, the off-scalesignal recognition circuitry of the SmartMonitor 2 may activate and cuase brief pauses in detection. Once normal signal detection by the monitor resumes, allow and additional 10 seconds for the detection circuits to stabilize before proceeding with verifying the operation of the SmartMonitor 2. After a change in rate, it will take an additional 10-30 seconds for the rate display to reach its specified value.

Verification of the Apnea Alarm and Delay

Due to large signal changes that result when Simulator settings are initially changed, the off-scale signal recognition circuitry of the SmartMonitor 2 may activate and cause brief pauses in detection. Once normal signal detection by the monitor resumes, allow an additional 10 seconds for the circuitry to stabilize before proceeding with verifying the operation of the SmartMonitor 2.

Simulator Setting for Test Set Up	
ECG Beats/Min	**100**
ECG AMPL./MV	0.5
Resp. Breaths/Min	**30**
Base Impedance OHMS	200

Press RESET button to reset alarm lights.

Test Point	Simulator Setting		Detection	Apnea Alarm	Pass
1	Variation OHMS	1	YES	NO	
2	Variation OHMS	0	NO	Red APNEA light should illuminate and audible alarm should beep 20 seconds (+/-1) after last respiration is detected.	

Verification of Low Breath Rate Alarm

1. Enter the Menu Mode of the SmartMonitor 2 as directed in the ALARM SETPOINTS section. Change the entry for LOW BREATH from OFF to 16 BrPM.

2 Turn the SmartMonitor 2 off using the correct power-off procedure:
   Press and hold the blue RESET button
   Press and release the gray POWER button
   Wait two seconds then release the RESET button

3. Turn the SmartMonitor 2 POWER on. (The SmartMonitor 2 must be powered off and then on for the changed parameter values to be accepted.)

4. Enter your results on page 8-11.

5. Enter the Menu mode of the SmartMonitor 2 as directed in the ALARM SETPOINTS sections. Change the entry for LOW BREATH ALARM from 16 BrPM to OFF.

6. Turn the SmartMonitor 2 off using the correct power-off procedure:
   Press and hold the RESET button
   Press and release the POWER button
   Wait two seconds then release the RESET button

7. Turn the SmartMonitor 2 POWER on. (The SmartMonitor 2 must be powered off and then on for the changed parameter values to be accepted.

Verification of Low Breath Rate Alarm

Test Point	Simulator Setting		Detection	Low Breath Alarm	Pass
1	Resp. Breaths/Min	10	YES	Within 20 seconds (+/-5), the red APNEA light should flash and the audible alarm should beep once per second.	
2	Resp. Breaths/Min	50	YES	NO	

Simulator Setting for Test Set Up	
ECG Beats/Min	100
ECG AMPL./MV	0.5
Variation OHMS	**1**
Resp. Breaths/Min	**50**
Base Impedance OHMS	200

Verification of the Low and High Heart Alarms

Test Point	Simulator Setting		Alarm	Low Heart Red Light On.	High Heart Red Light On.	Pass
1	ECG Beats/Min	50	YES	YES	NO	
2	ECG Beats/Min	100	NO	YES	NO	
Press the RESET button to reset the red Low Heart Light						
3	ECG Beats/Min	240	YES	NO	YES	
4	ECG Beats/Min	100	NO	NO	YES	
Press the RESET button to reset the red High Heart Light						

Simulator Setting for Test Set Up	
ECG Beats/Min	100
ECG AMPL./MV	**0.5**
Variation OHMS	**1**
Resp. Breaths/Min	**50**
Base Impedance OHMS	**200**

Due to large signal changes that result when Simulator settings are initially changed, the off-scale signal recognition circuitry of the SmartMonitor 2 may activate and cuase brief pauses in detection. Once normal signal detection by the monitor resumes, allow an additional 10 seconds for the circuitry to stabilize before proceeding with verifying the operation of the SmartMonitor 2.

Verification of Cardiogenic Artifact Rejection

Simulator Setting for Test Set Up	
ECG Beats/Min	100
ECG AMPL./MV	0.5
Variation OHMS	1
Resp. Breaths/Min	50
Base Impedance OHMS	200

Test Point	Simulator Setting		Detection	Apnea Alarm	Pass
1	Resp. Breaths/Min	100	NO	YES	
2	Resp. Breaths/Min	50	YES	NO	
Press the RESET button to turn the APNEA light off.					

Verification of Accidental Power-Off Alarm (Sibling Alarm)

1. Press the POWER button to turn the SmartMonitor 2 off (without pressing the RESET button.) The audible alarm should sound continuously.

2. Press and hold the RESET button. Press and release the POWER button. Continue to press the RESET button for two seconds. The audible alarm should stop.

Test Point	Test Operation	Alarm	Power Light	Pass
1	Power Off Monitor by JUST pressing the POWER button	YES	ON	
2	Use proper POWER Off procedure: Press and hold the RESET button. Press and Release the POWER button. Wait two seconds, then release the RESET button	NO	OFF	

Verification of Loose Connection Alarm

Simulator Setting for Test Set Up	
ECG Beats/Min	100
ECG AMPL./MV	0.5
Variation OHMS	1
Resp. Breaths/Min	50
Base Impedance OHMS	200

Test Point	Simulator Setting		Loose Lead Alarm	Loose Lead Light On.	Pass
1	Base Impedance OHMS	1K	NO	NO	
2	Base Impedance OHMS	4K	YES	YES	
3	Base Impedance OHMS	1K	NO	YES	
4	Press the RESET button on Monitor		NO	NO	
5	Disconnect Patient cable from Monitor		YES	YES	
6	Reconnect Patient Cable to Monitor and press the RESET button on Monitor		NO	NO	
7	Disconnect Black Lead wire from the Simulator		YES	YES	
8	Reconnect Black Lead Wire to Simulator and press the RESET button on Monitor.		NO	NO	
9	Disconnect White Lead wire from the Simulator		YES	YES	
10	Reconnect White Lead Wire to Simulator and press the RESET button on Monitor		NO	NO	
11	Disconnect Black lead Wire from Patient Cable		YES	YES	
12	Reconnect Black Lead Wire to Patient Cable and press the RESET button on Monitor.		NO	NO	
13	Disconnect White Lead Wire from Patient Cable		YES	YES	
14	Reconnect White Lead Wire to Patient Cable and Press RESET button on Monitor.		NO	NO	

Optional Verification of the Batteries

Main Battery Pack

1. Unplug the Battery charger from the SmartMonitor 2.
2. Insert the patient cable into the receptacle labeled Patient Input on the front of the SmartMonitor 2.
3. Insert the lead wires into the Functional Self-Test socket on the side panel of the SmartMonitor 2.
4. Insert the lead wires into the Patient Cable socket on the side panel of the SmartMonitor 2.
5. If you are using the Remote Alarm, connect it to the REMOTE ALARM output on the back of the Monitor at this time. Turn the Remote Alarm power to on. Each time the Monitor Alarms verify that the sound can be heard through the Remote Alarm and that the Monitor light on the Remote Alarm comes on.
6. Press the POWER button to turn the SmartMonitor 2 on. The alarm should beep and all the lights should come on for approximately 4 seconds. After all the alarm lights turn off, the CHARGER and POWER light should remain on and the green HEART and RESPIRATION light should be blinking. The lights will continue to flash for about 30 seconds.

If the following lights remain on or are blinking, and/or the alarm sounds continuously, corrective action should be taken before continuing the Checkout Procedure.

7. If the battery pack is not sufficiently charged, the alarm will sound continuously, and the LOW BATTERY light will activate. The Main battery pack has a life expectancy of 2-3 years and should be replaced on a preventative basis within this time frame.

Test Point	Test Operation	Charge Light	Pass
1.	Unplug Battery Charger from monitor and perform the Functional Self-Test using Battery power only.	OFF	

After approximately 45 seconds, the green HEART and RESPIRATION lights should stop blinking. The red LOW light should illuminate with approximately seven seconds after the HEART light stops flashing, and the audible alarm should beep once every second.

Clock Chip Battery

Once every 15 years, the SmartMonitor 2 should be returned to Respironics for replacement of the clock chip, which contains an internal lithium battery. If this battery is depleted, the monitor will sound a constant alarm, the LCD display will read "ERROR 2," and the memory may possibly be cleared, causing the alarm and record parameters to be set to standard values.

Respironics recommends that you consider replacement of the clock chip if the monitor is over 15 years old.

Operational Verification of Remote Alarm

1. Before using any Remote Alarm, first verify its proper operation by following the instructions that came with the device.
2. Connect a Model 990 Remote Alarm to the REMOTE ALARM output on the back of the Monitor. Move the Remote Alarm at least 25 feet away from the monitor.
3. Turn the Remote Alarm POWER to on.
4. Press the SmartMonitor 2 POWER button to on. Repeat steps 5-9 of the Functional Self-Test.
5. Go the location of the Remote Alarm. Make sure you can also hear the alarm through the Remote Alarm and that the MONITOR light on the remote Alarm is on. This light will come on each time the Monitor Alarms.
6. Turn the Remote Alarm POWER off.
7. Turn the Monitor POWER OFF (refer to Step 11 of the Functional Self-Test).

WARNING
IF YOUR SMARTMONITOR 2 DOES NOT PASS ALL TEST POINTS IN ALL SECTIONS OF THIS CHECKOUT MANUAL, THE SMARTMONITOR 2 MUST NOT BE USED FOR PATIENT APPLICATIONS. FOR TECHNICAL SUPPORT OR PRODUCT SERVICE, PLEASE CONTACT RESPIRONICS AT (800) 421-8754.

Computer Retrieval of SmartMonitor 2 Data

Should you like to view the data or print reports please refer to the Synergy™-E Manual.

All information on the data sheets should be recorded after each verification has been completed. The data sheet must be signed in ink and dated by the technician performing the verification

Notification / RA# _____

Serial #: _____

Tested by: (print)_____

Tested by: (signature)_____

Date: _____/_____/_____

Appendix A

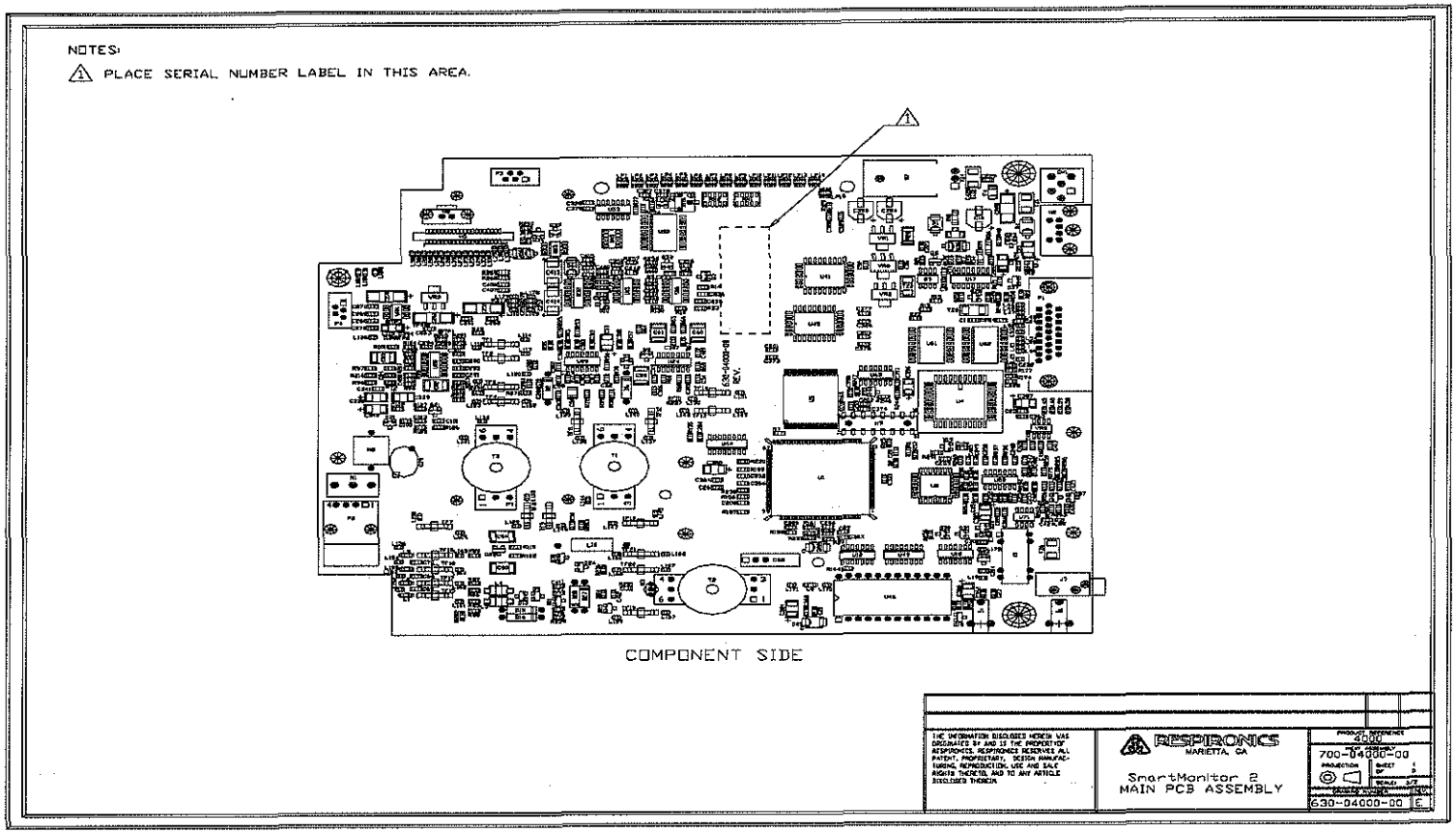
NOTES:
1 PLACE SERIAL NUMBER LABEL IN THIS AREA.
COMPONENT SIDE
RESPIRONICS
MARIETTA, GA
SmartMonitor 2
MAIN PCB ASSEMBLY
700-04000-00
630-04000-00

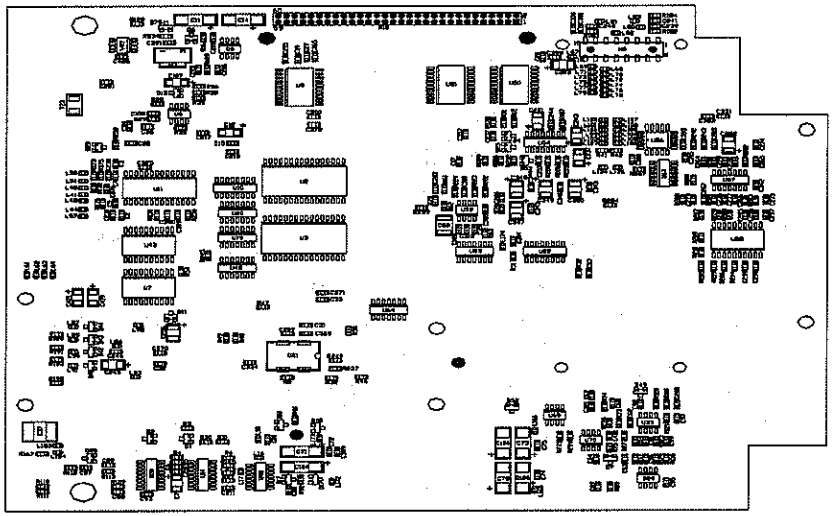

SOLDER SIDE

THE INFORMATION DISCLOSED HEREIN WAS ORIGINATED BY AND IS THE PROPERTY OF RESPIRONICS. RESPIRONICS RESERVES ALL PATENT, PROPRIETARY, DESIGN MANUFACTURING, REPRODUCTION, USE AND SALE RIGHTS THERETO, AND TO ANY ARTICLE DISCLOSED THEREIN.

RESPIRONICS
MARIETTA, GA

SmartMonitor 2
MAIN PCB ASSEMBLY

PRODUCT REFERENCE
4000

700-04000-00

630-04000-00 E

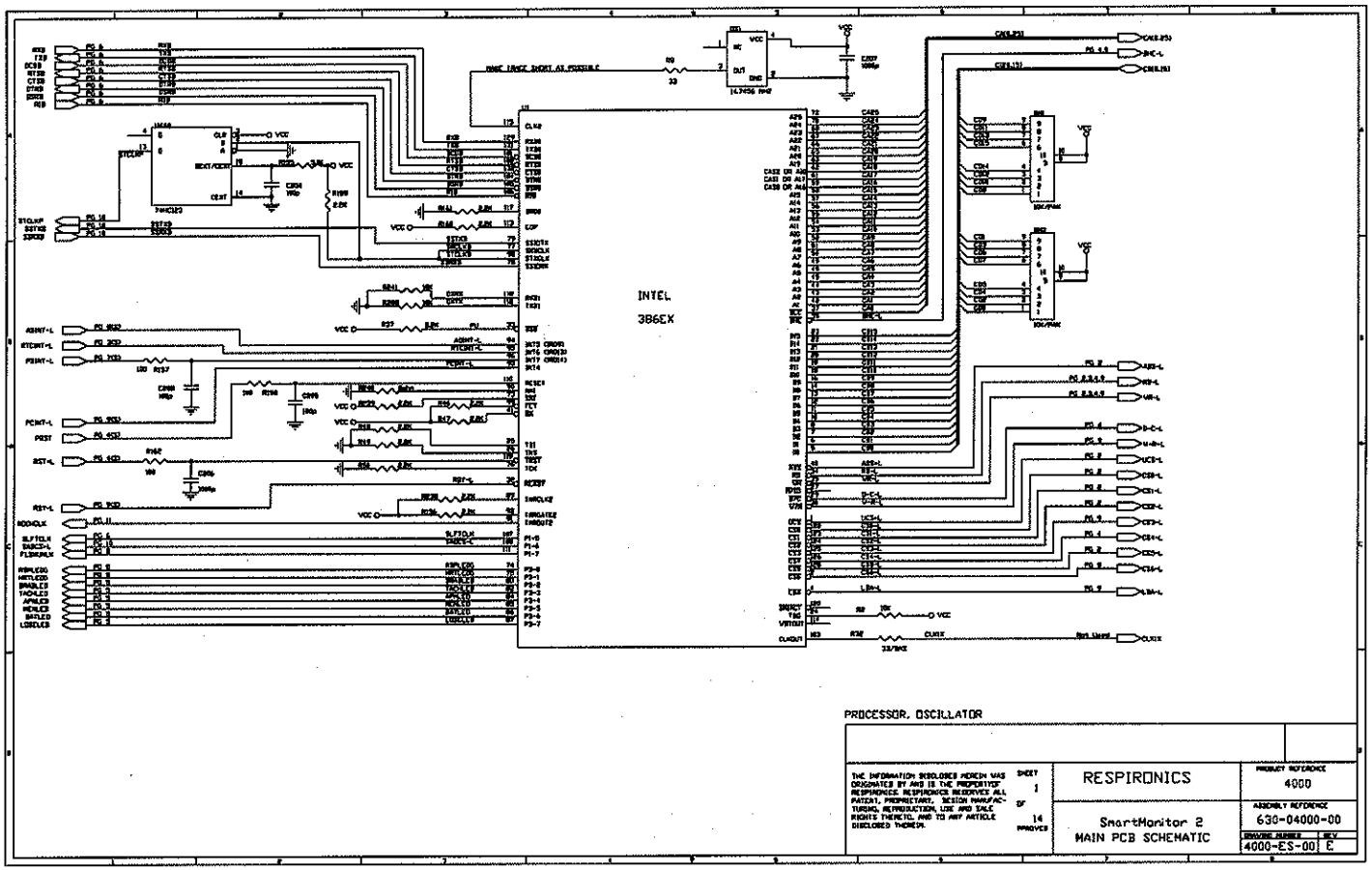
INTEL
386EX
PROCESSOR, OSCILLATOR
RESPIRONICS
SmartMonitor 2
MAIN PCB SCHEMATIC
PROJECT REFERENCE
4000
ASSEMBLY REFERENCE
630-04000-00
DRAWING NUMBER
4000-ES-001
REV
E
SHEET
1
OF
14

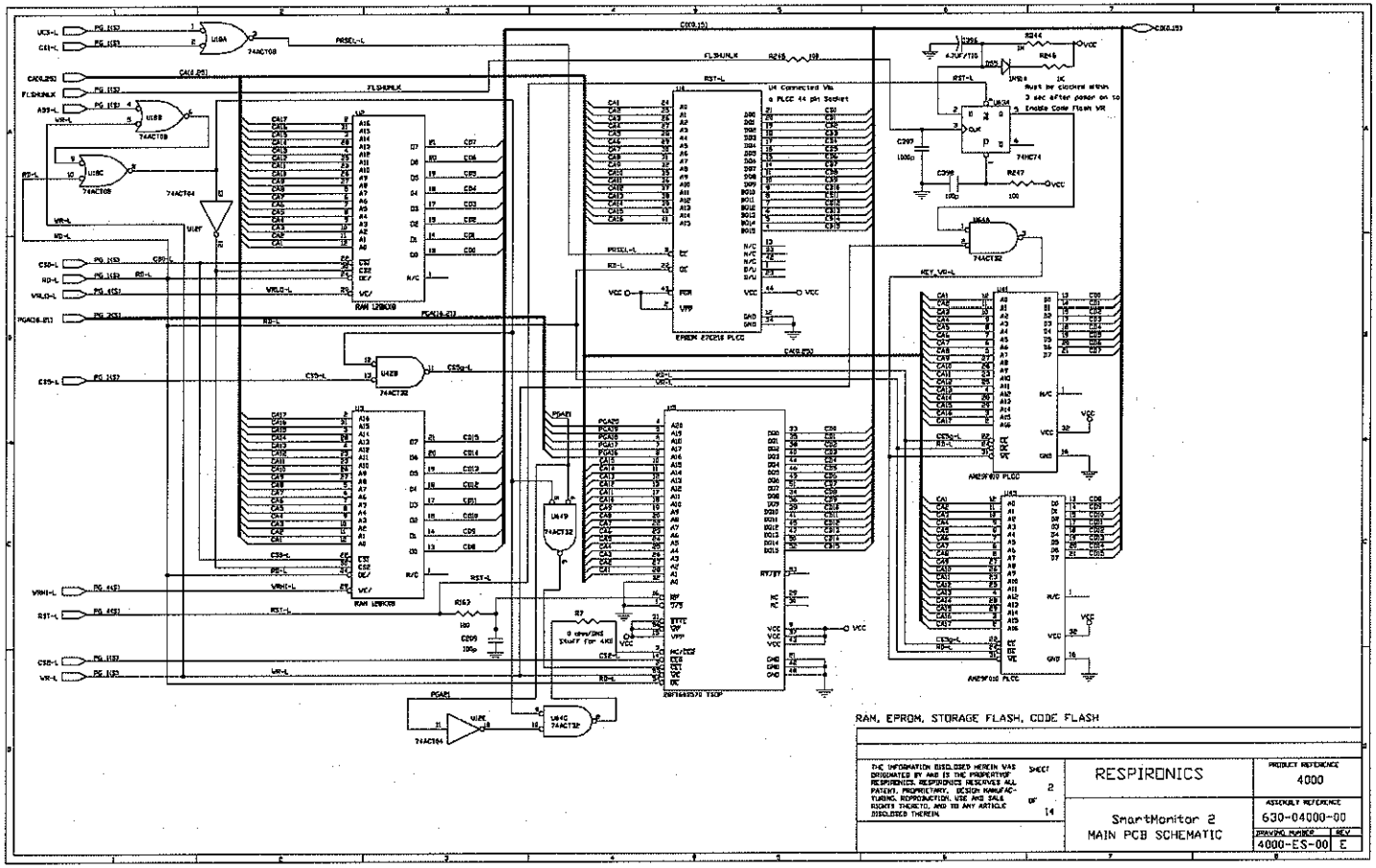
RAM, EPROM, STORAGE FLASH, CODE FLASH
THE INFORMATION DISCLOSED HEREIN WAS DESIGNATED BY AND IS THE PROPERTY OF RESPIRONICS. RESPIRONICS RESERVES ALL PATENT, PROPRIETARY, DESIGN MANUFACTURING, REPRODUCTION, USE AND SALE RIGHTS THERETO, AND TO ANY ARTICLE DISCLOSED THEREIN.
SHEET 2 OF 14
RESPIRONICS
PRODUCT REFERENCE 4000
SmartMonitor 2
MAIN PCB SCHEMATIC
ASSEMBLY REFERENCE 630-04000-00
DRAWING NUMBER 4000-ES-00
REV E

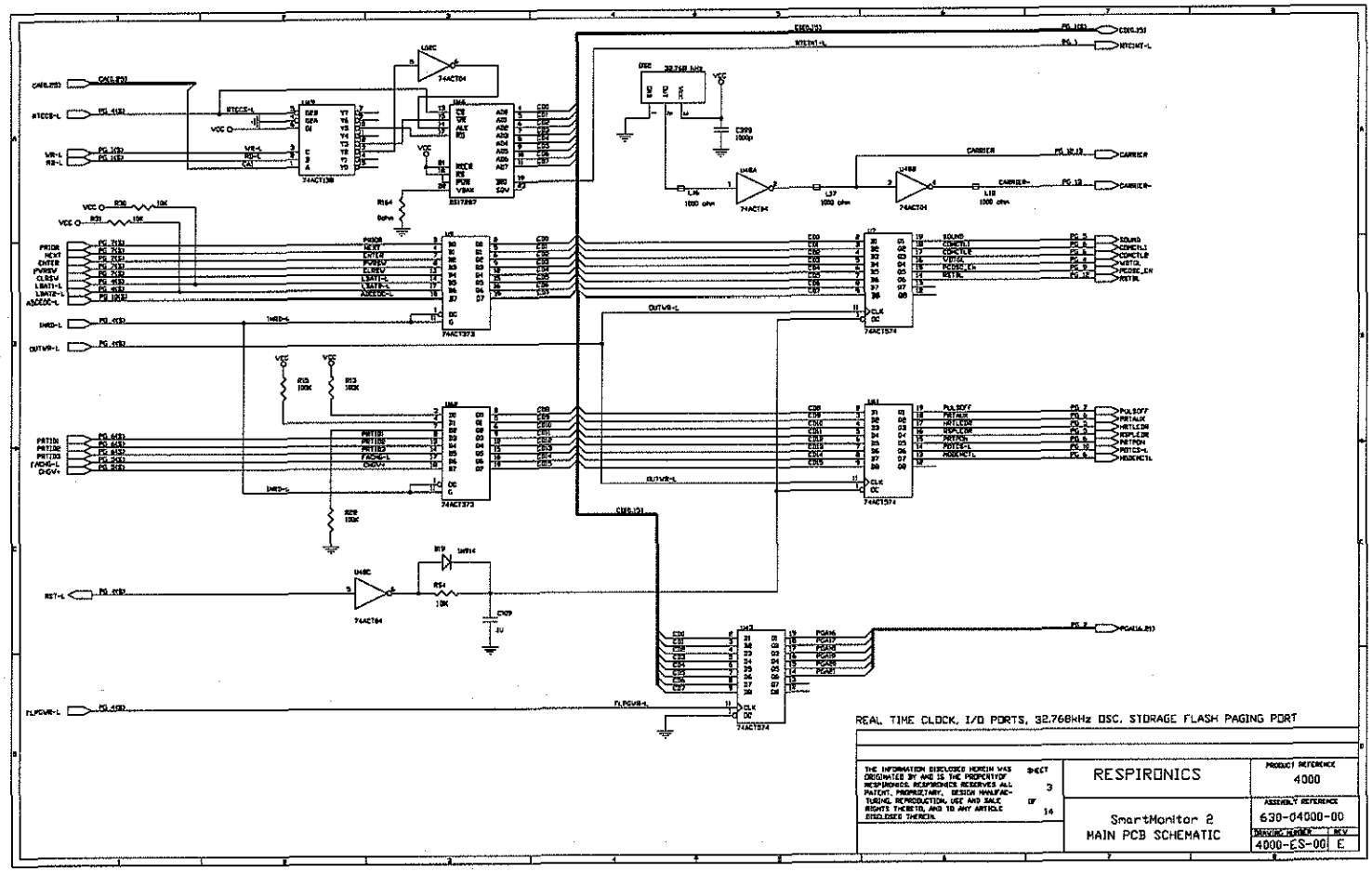
REAL TIME CLOCK, I/O PORTS, 32.768kHz OSC, STORAGE FLASH PAGING PORT
RESPIRONICS
SmartMonitor 2
MAIN PCB SCHEMATIC
PRODUCT REFERENCE
4000
ASSEMBLY REFERENCE
630-04000-00
DRAWING NUMBER
4000-ES-00
REV
E
SHEET
3
OF
14

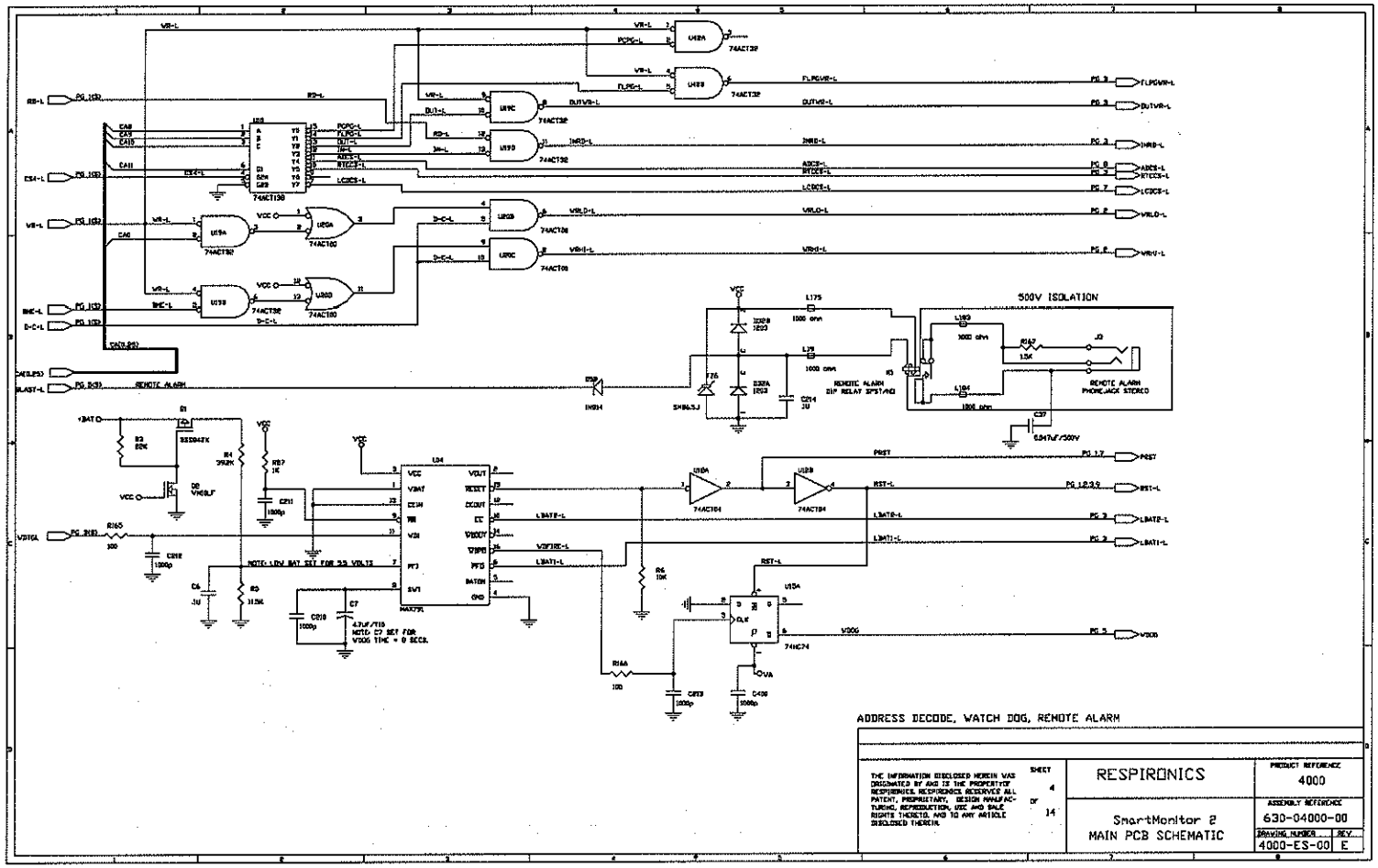
500V ISOLATION
REMOTE ALARM
ADDRESS DECODE, WATCH DOG, REMOTE ALARM
RESPIRONICS
SmartMonitor 2
MAIN PCB SCHEMATIC
PRODUCT REFERENCE
4000
ASSEMBLY REFERENCE
630-04000-00
DRAWING NUMBER
4000-ES-00
REV.
E
SHEET
4
OF
14

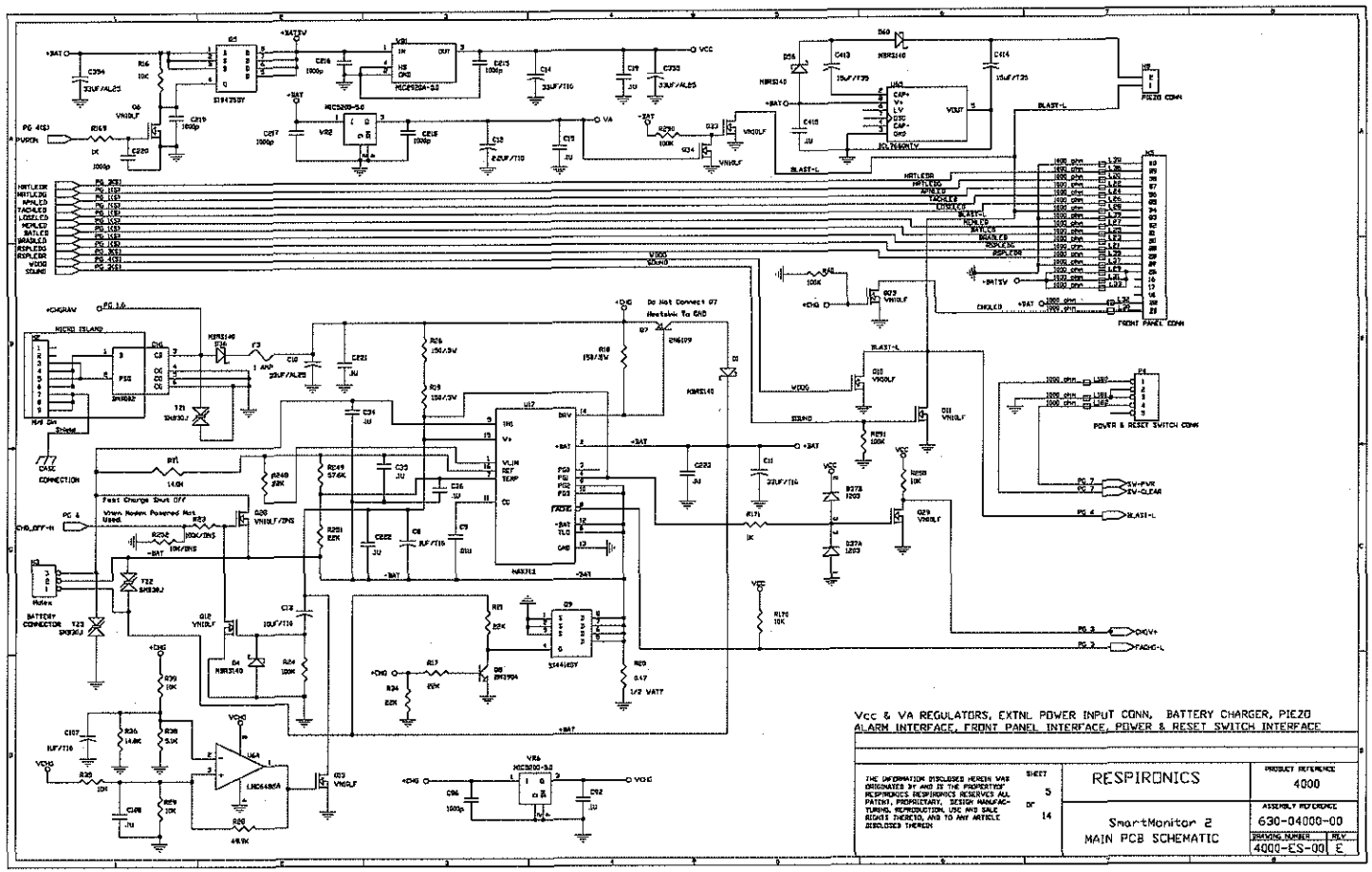
Vcc & VA REGULATORS, EXTNL POWER INPUT CONN, BATTERY CHARGER, PIEZO ALARM INTERFACE, FRONT PANEL INTERFACE, POWER & RESET SWITCH INTERFACE
RESPIRONICS
SmartMonitor 2
MAIN PCB SCHEMATIC
4000
630-04000-00
4000-ES-00
E
5
14